NOVEMBER 19, 2002 (P= 20.31, Bo = 2.39, Lo = 148.73)

KITT PEAK MAGNETOGRAM

N **868.8 nm**

Bright = +
Dark = -

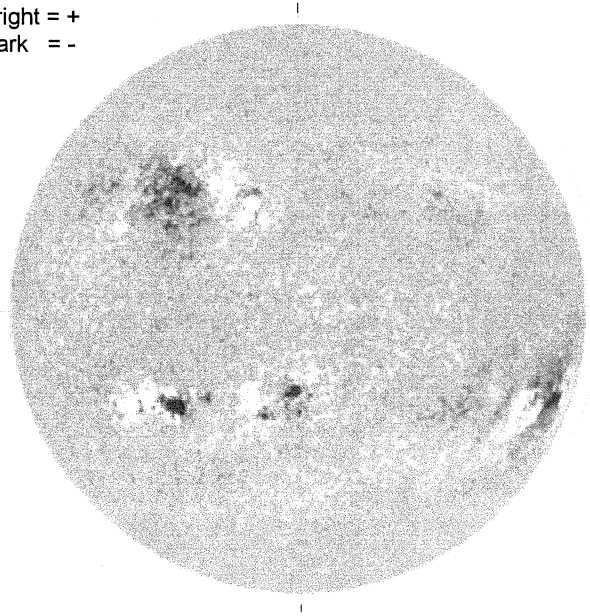

E

1558 UT

STANFORD MAGNETOGRAM

N

Solid = +
Dashed = -

2106 UT

MT. WILSON MAGNETOGRAM

N

DeltaY = 13.1
DeltaX = 9.6

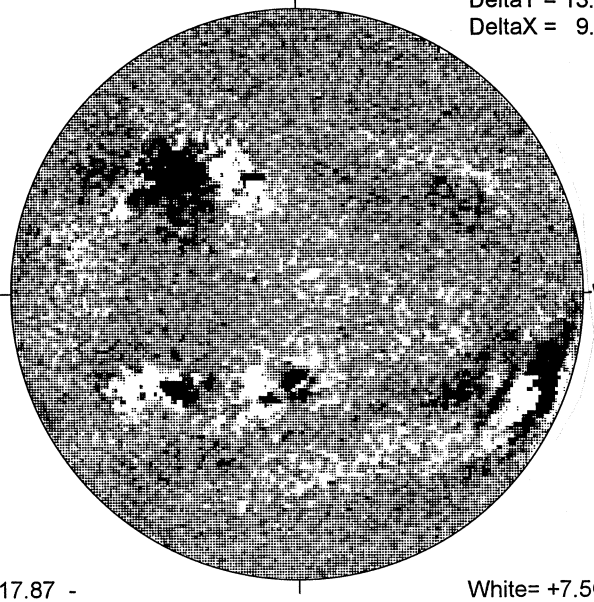

W

17.87 -
18.84 UT

White= +7.5G
Black = -7.5G

BIG BEAR H-ALPHA

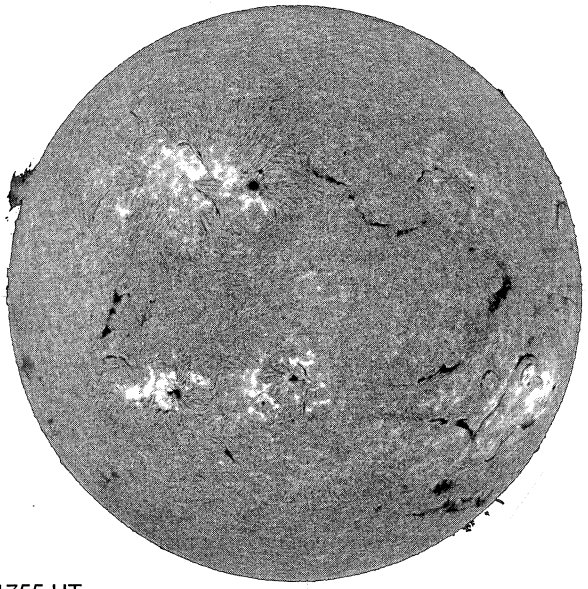

E

1755 UT

S

RAMEY SUNSPOT

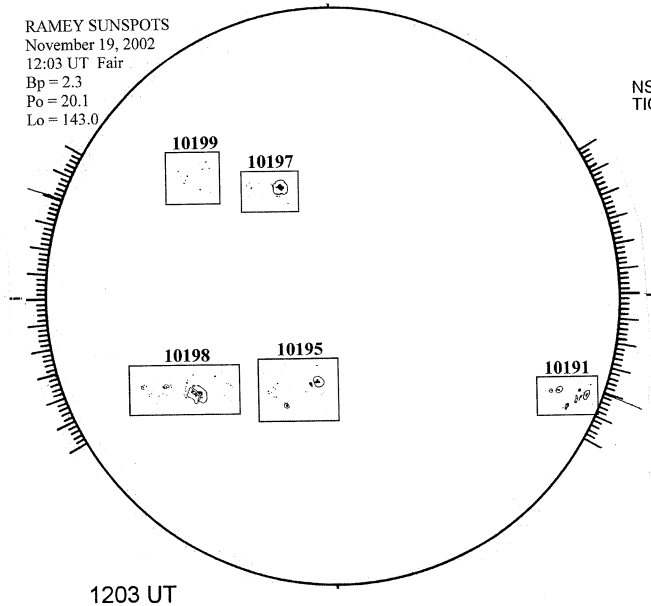

1203 UT

S

SACRAMENTO PEAK CORONA (1.15 Radii)----

NSO / SACRAMENTO PEAK CORONAL DATA
TICK MARKS EVERY 20 MILLIONTHS

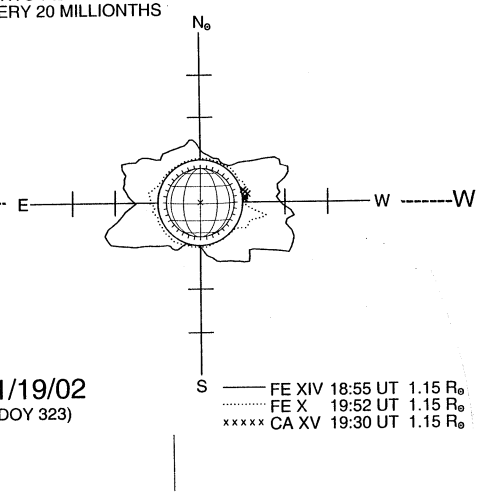

11/19/02
(DOY 323)

S