NOVEMBER 14, 2002 (P= 21.74, Bo = 2.98, Lo = 214.64)

KITT PEAK MAGNETOGRAM

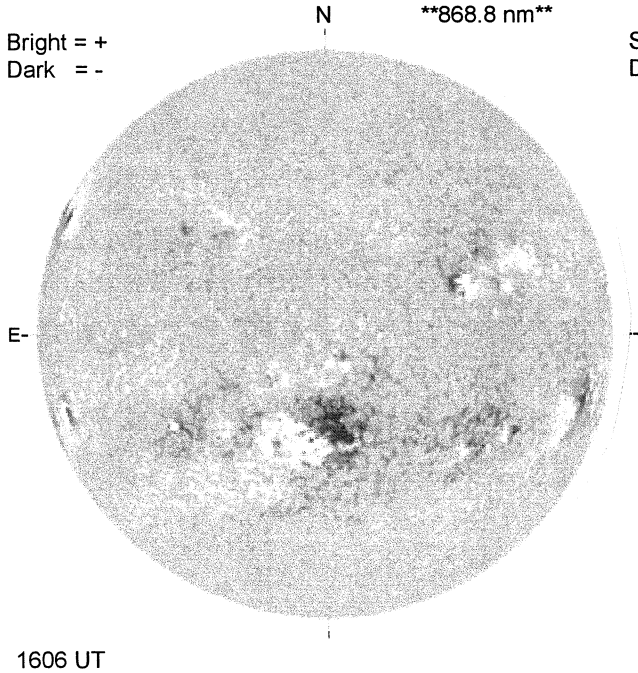

STANFORD MAGNETOGRAM

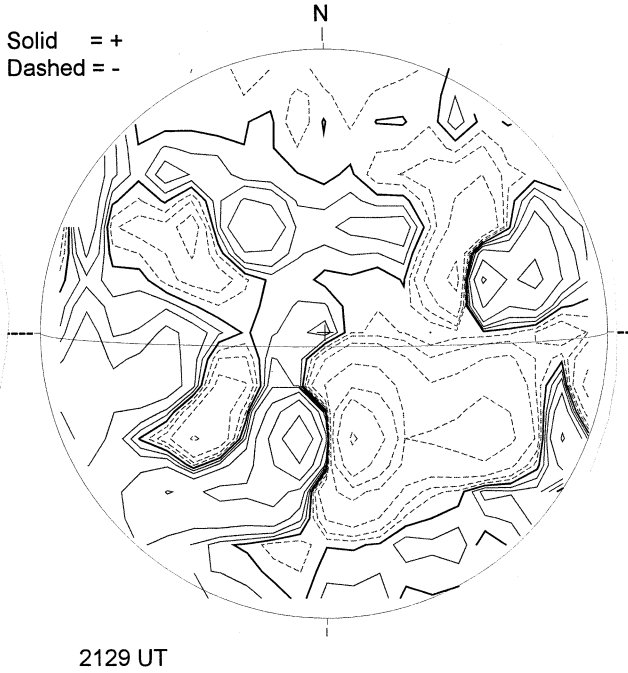

MT. WILSON MAGNETOGRAM

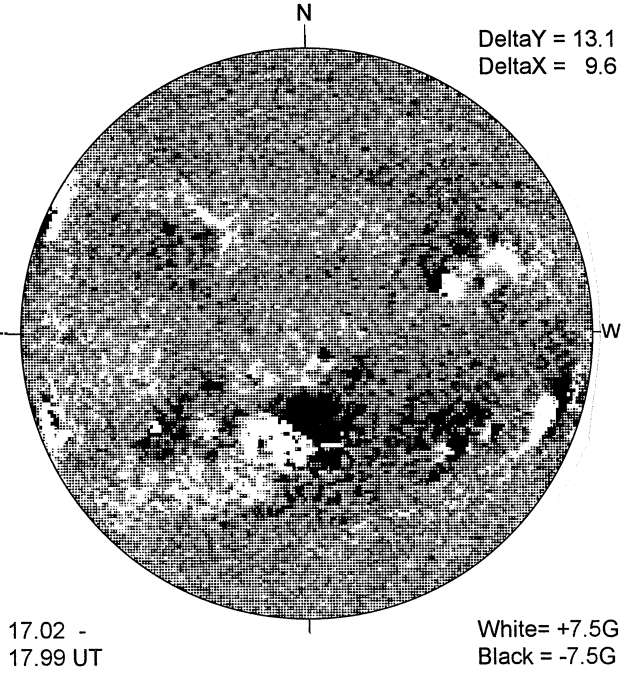

BIG BEAR H-ALPHA

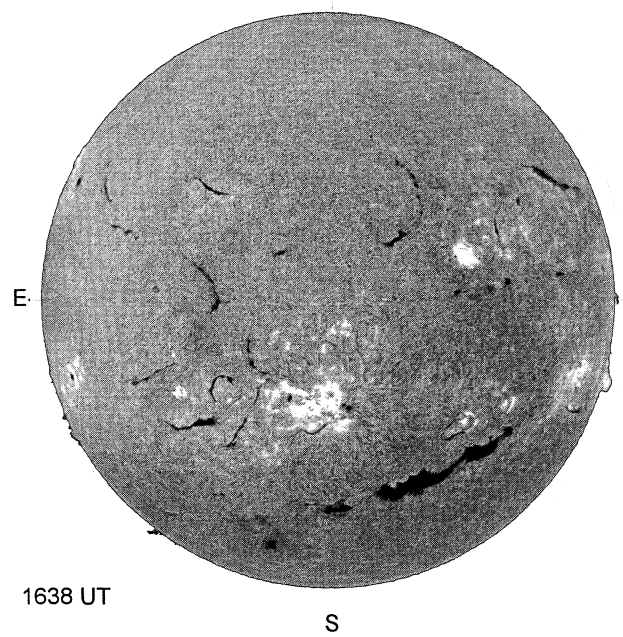

RAMEY SUNSPOT

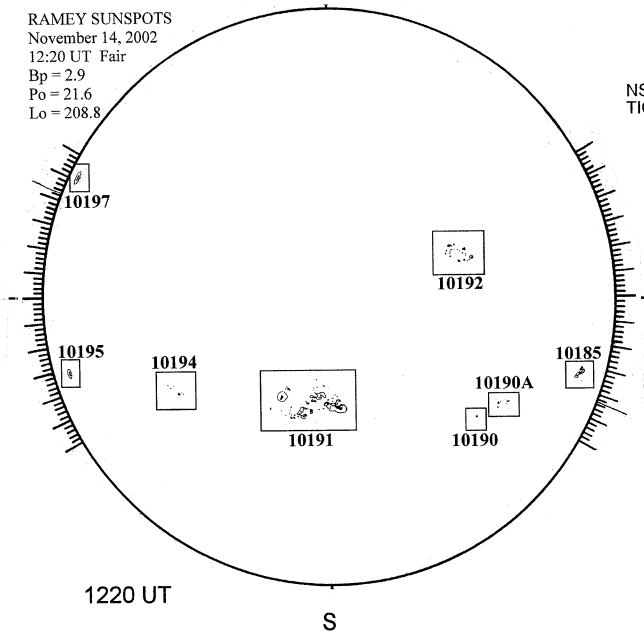

SACRAMENTO PEAK CORONA (1.15 Radii)----

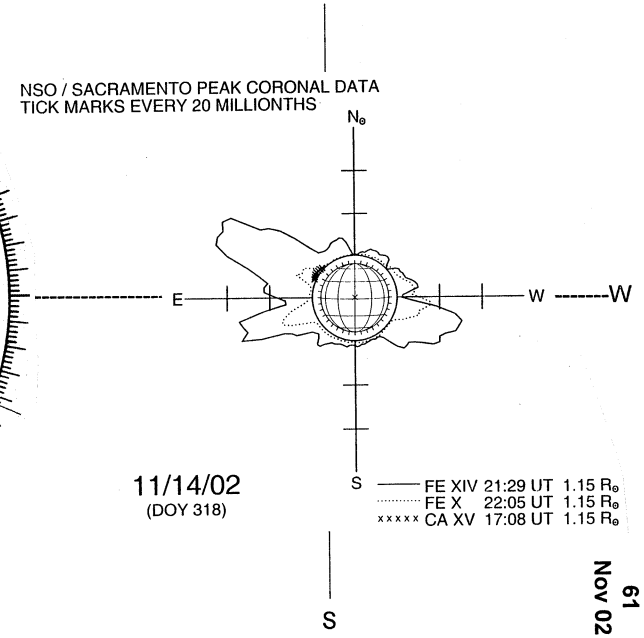

61
Nov 02