NOVEMBER 13, 2002 (P= 22.00, Bo = 3.10, Lo = 227.83)

KITT PEAK MAGNETOGRAM

868.8 nm

Bright = +
Dark = -

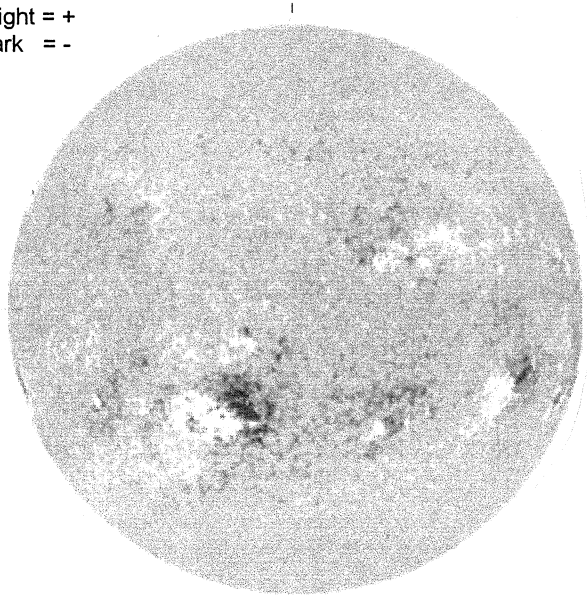

1615 UT

STANFORD MAGNETOGRAM

Solid = +
Dashed = -

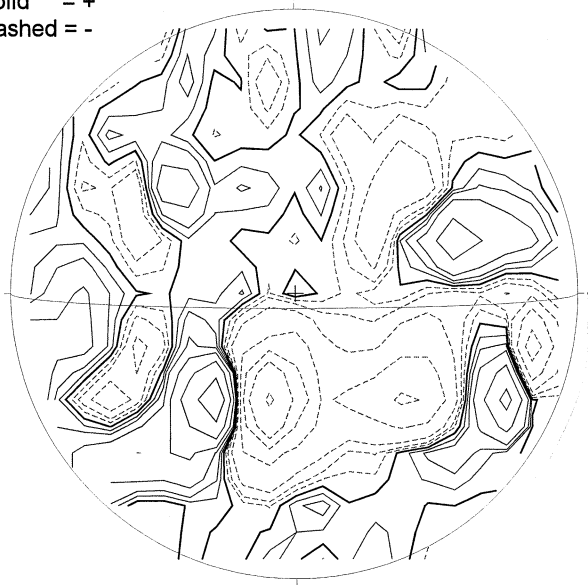

2304 UT

MT. WILSON MAGNETOGRAM

DeltaY = 13.1
DeltaX = 9.6

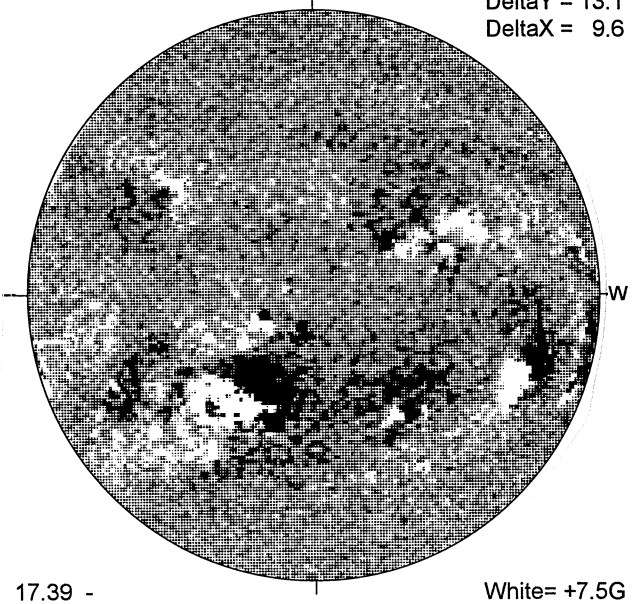

17.39 -
18.36 UT

White= +7.5G
Black = -7.5G

BIG BEAR H-ALPHA

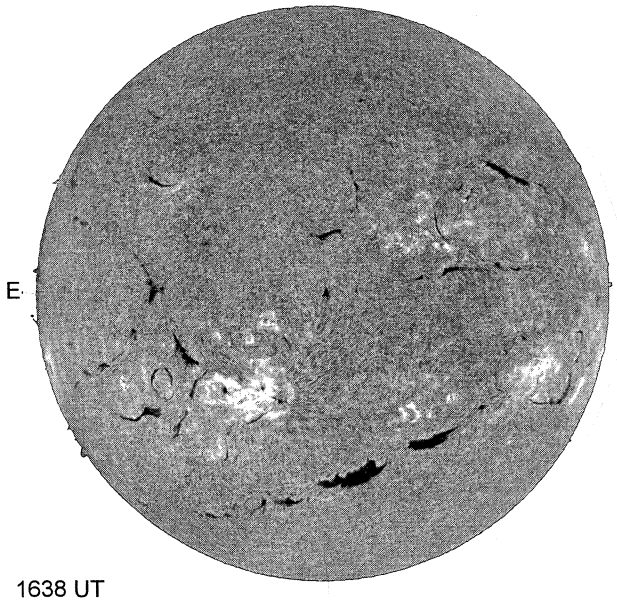

1638 UT

S

RAMEY SUNSPOT

RAMEY SUNSPOTS
November 13, 2002
11:40 UT Fair
Bp = 3.0
Po = 21.8
Lo = 221.5

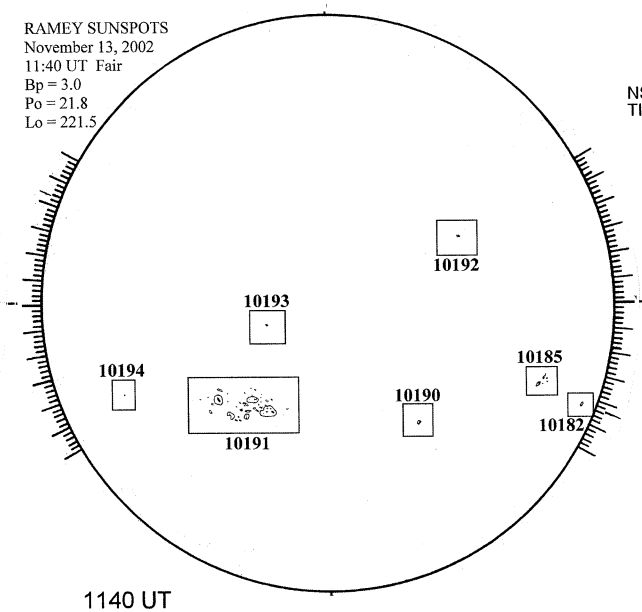

1140 UT

S

SACRAMENTO PEAK CORONA (1.15 Radii)----

NSO / SACRAMENTO PEAK CORONAL DATA
TICK MARKS EVERY 20 MILLIONTHS

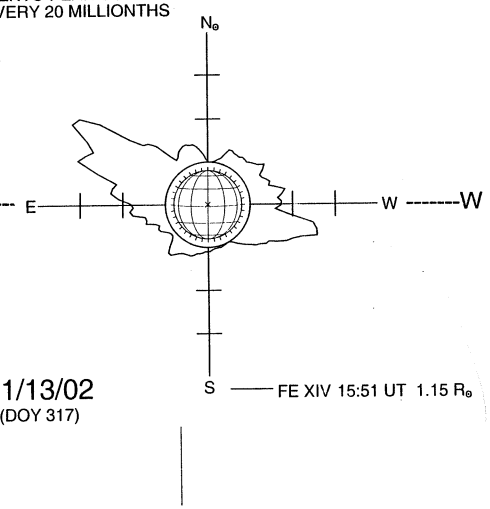

11/13/02
(DOY 317)

FE XIV 15:51 UT 1.15 R☉

S