NOVEMBER 6, 2002 (P= 23.62, Bo = 3.88, Lo = 320.11)

KITT PEAK MAGNETOGRAM

N **868.8 nm**

Bright = +
Dark = -

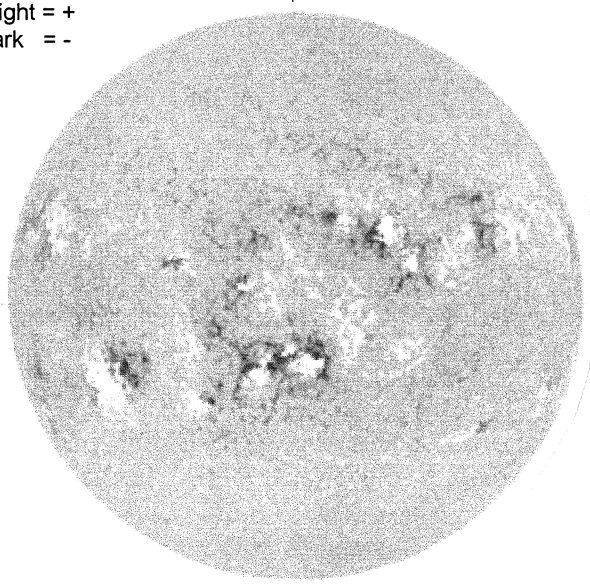

E-

1641 UT

STANFORD MAGNETOGRAM

N

Solid = +
Dashed = -

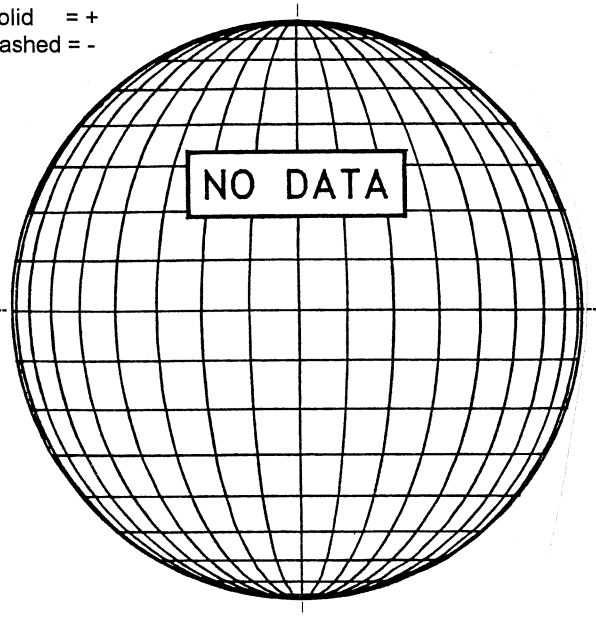

MT. WILSON MAGNETOGRAM

N

DeltaY = 13.1
DeltaX = 9.6

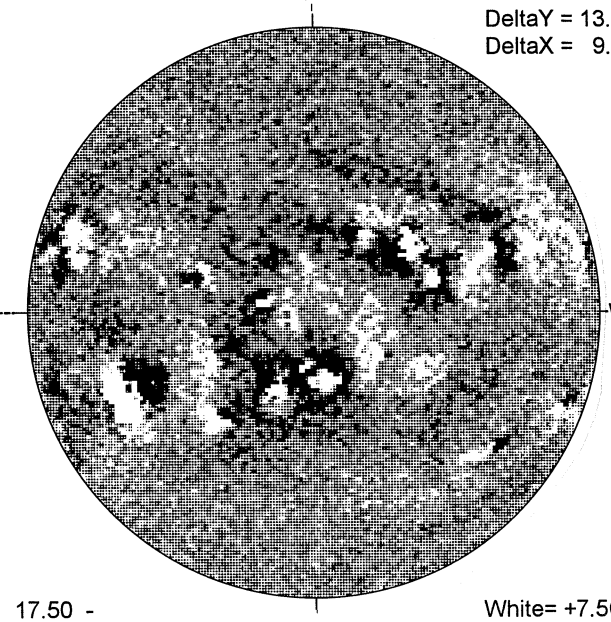

W

17.50 -
18.46 UT

White= +7.5G
Black = -7.5G

BIG BEAR H-ALPHA

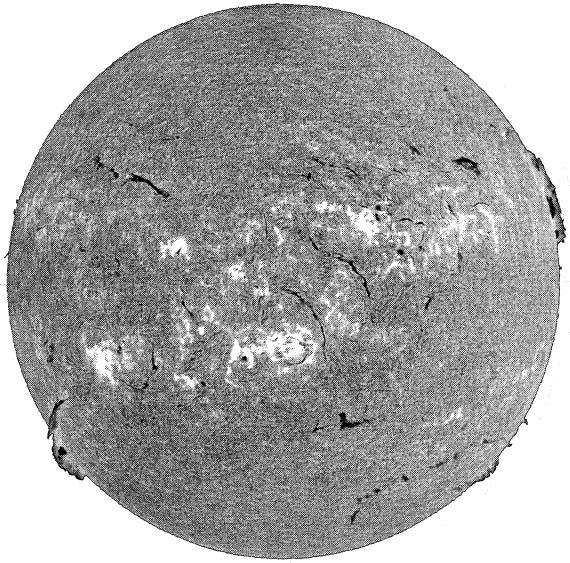

E--

1825 UT

S

RAMEY SUNSPOT

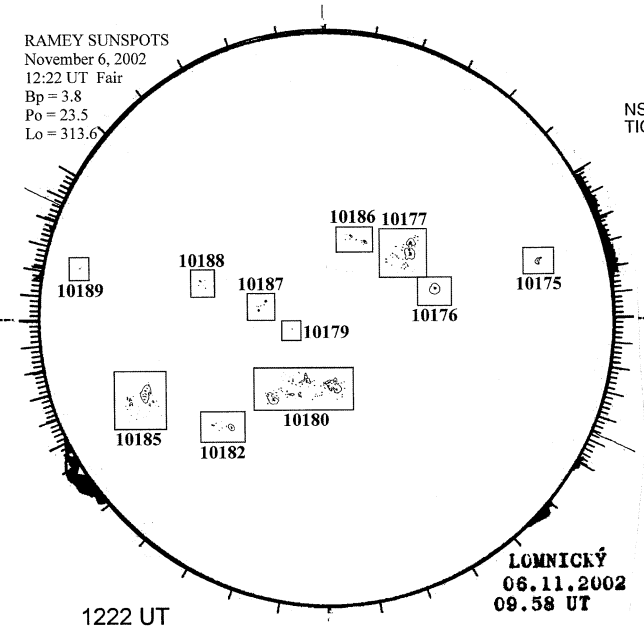

1222 UT
0958 UT LOMN Prom S

SACRAMENTO PEAK CORONA (1.15 Radii)----

NSO / SACRAMENTO PEAK CORONAL DATA
TICK MARKS EVERY 20 MILLIONTHS

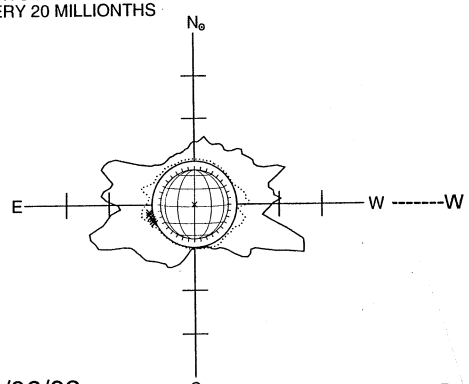

11/06/02
(DOY 310)

FE XIV 16:51 UT 1.15 R☉
FE X 18:01 UT 1.15 R☉
xxxxx CA XV 17:39 UT 1.15 R☉

S