OCTOBER 29, 2002 (P= 25.00 Bo = 4.69, Lo = 65.60)

KITT PEAK MAGNETOGRAM

868.8 nm

Bright = +
Dark = -

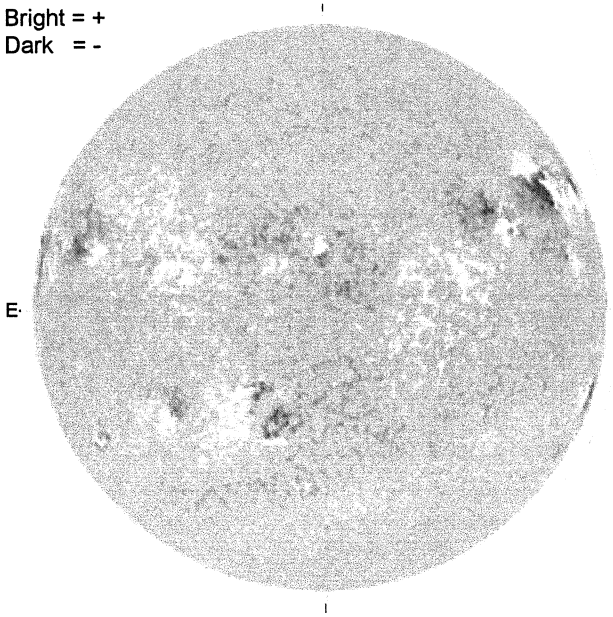

1839 UT

STANFORD MAGNETOGRAM

Solid = +
Dashed = -

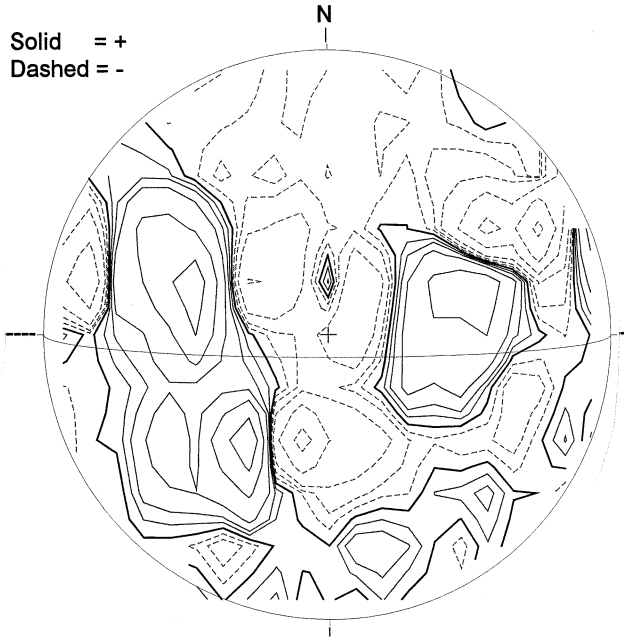

2112 UT

MT. WILSON MAGNETOGRAM

DeltaY = 13.1
DeltaX = 9.6

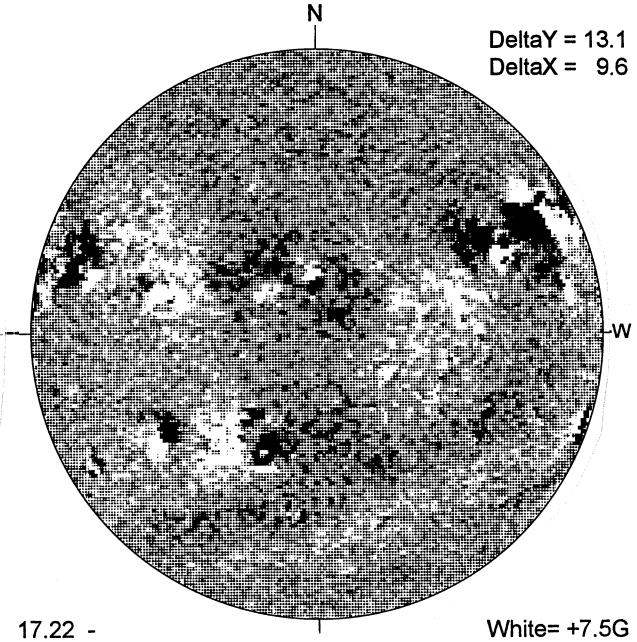

17.22 -
18.18 UT

White= +7.5G
Black = -7.5G

BIG BEAR H-ALPHA

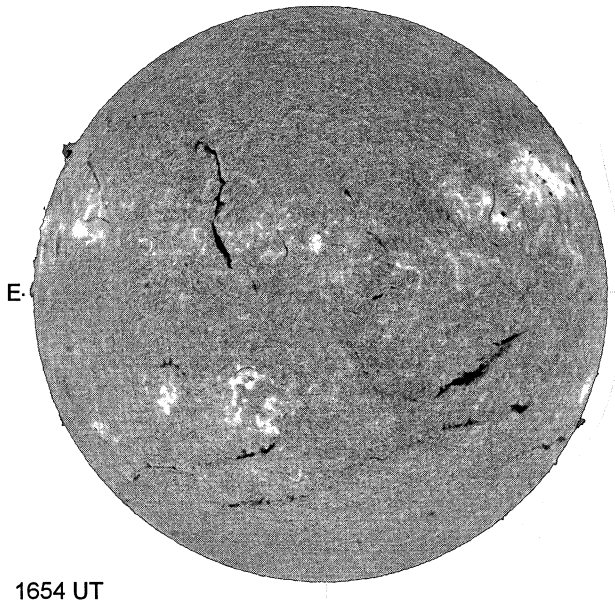

1654 UT

RAMEY SUNSPOT

RAMEY SUNSPOTS
October 29, 2002
12:25 UT Fair
Bp = 4.6
Po = 24.9
Lo = 59.8

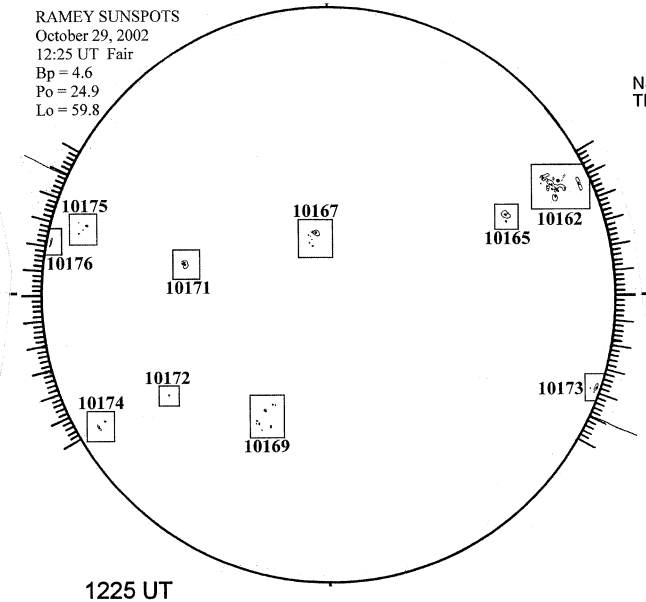

1225 UT

SACRAMENTO PEAK CORONA (1.15 Radii)

NSO / SACRAMENTO PEAK CORONAL DATA
TICK MARKS EVERY 20 MILLIONTHS

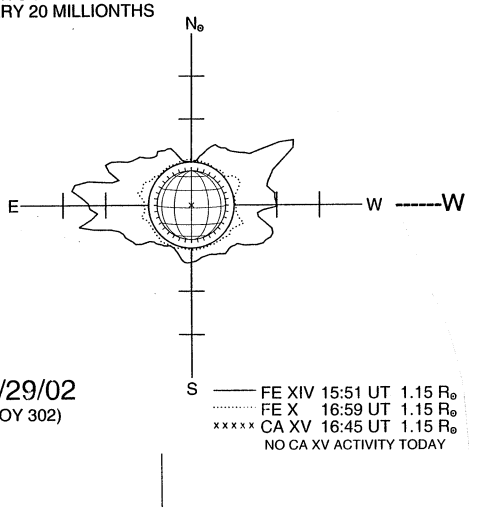

10/29/02
(DOY 302)

FE XIV 15:51 UT 1.15 R⊙
FE X 16:59 UT 1.15 R⊙
CA XV 16:45 UT 1.15 R⊙
NO CA XV ACTIVITY TODAY