OCTOBER 25, 2002 (P= 25.50, Bo = 5.07, Lo = 118.35)

KITT PEAK MAGNETOGRAM

N **868.8 nm**

Bright = +
Dark = -

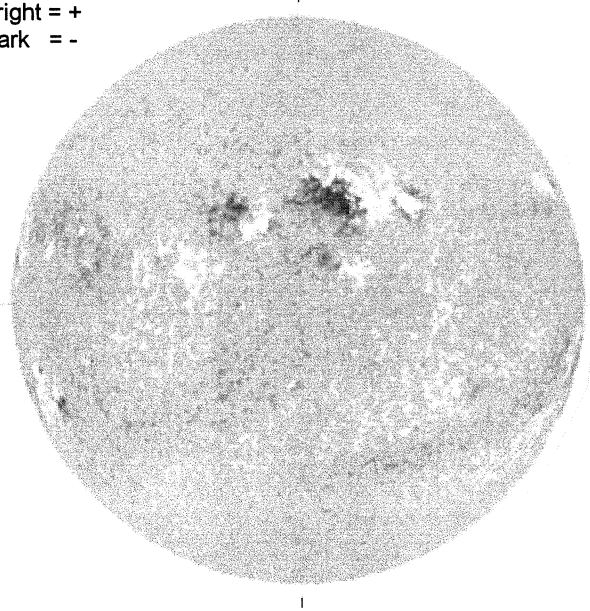

E-

1742 UT

STANFORD MAGNETOGRAM

N

Solid = +
Dashed = -

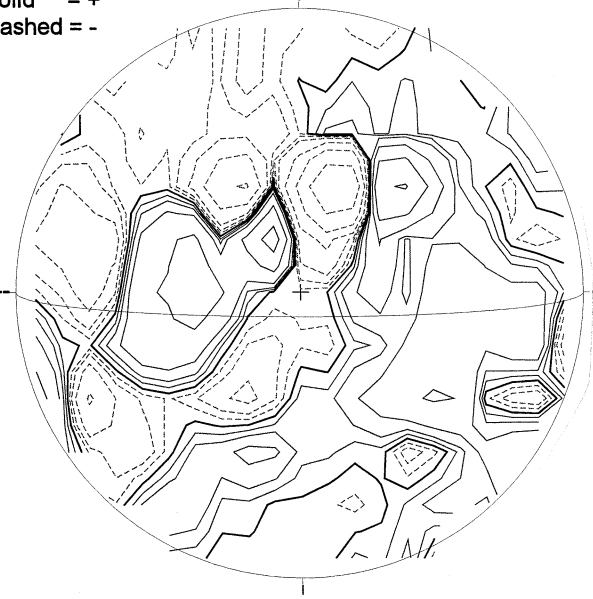

2111 UT

MT. WILSON MAGNETOGRAM

N

DeltaY = 13.1
DeltaX = 9.6

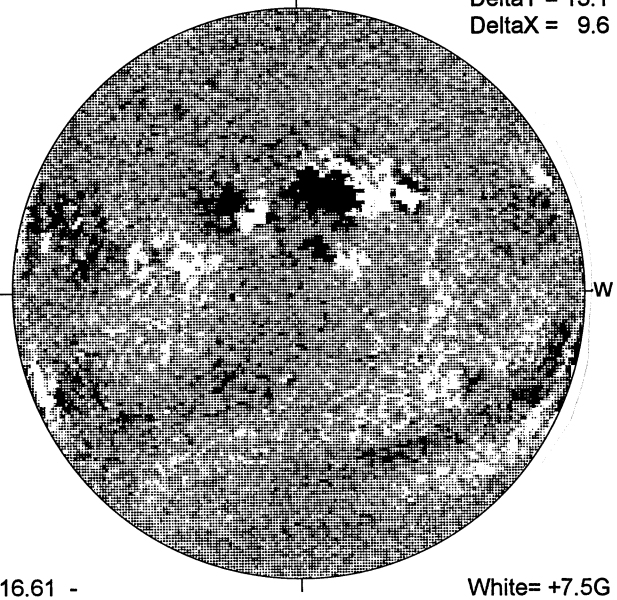

-W

16.61 -
17.57 UT

White= +7.5G
Black = -7.5G

BIG BEAR H-ALPHA

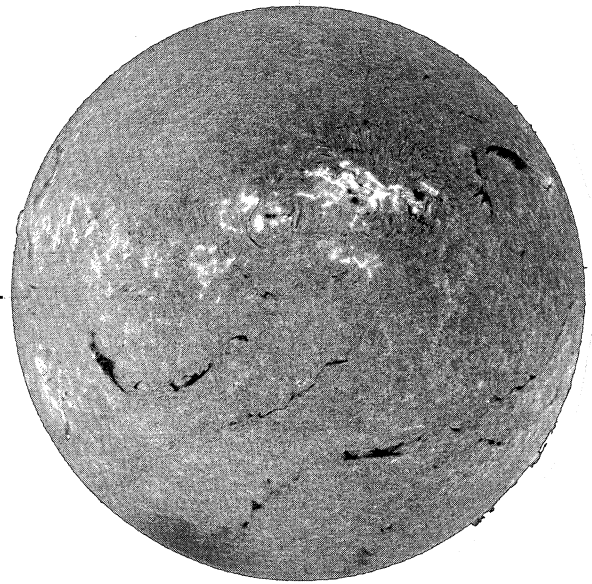

E-

2154 UT

S

RAMEY SUNSPOT

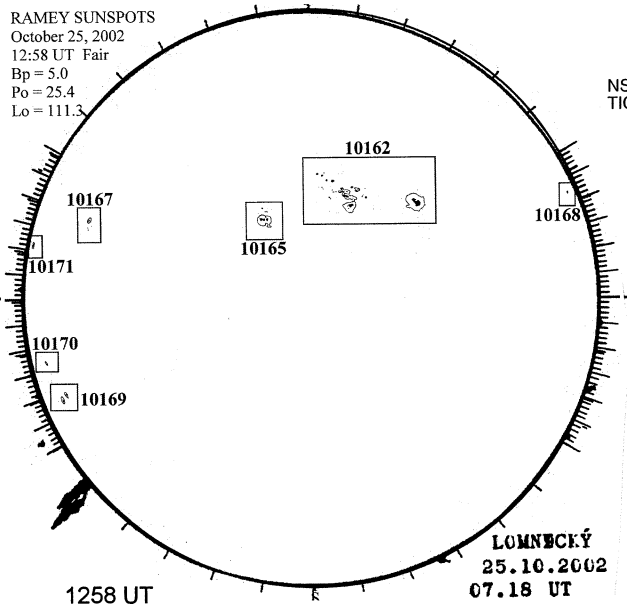

1258 UT
0718 UT LOMN Prom S

SACRAMENTO PEAK CORONA (1.15 Radii)

NSO / SACRAMENTO PEAK CORONAL DATA
TICK MARKS EVERY 20 MILLIONTHS

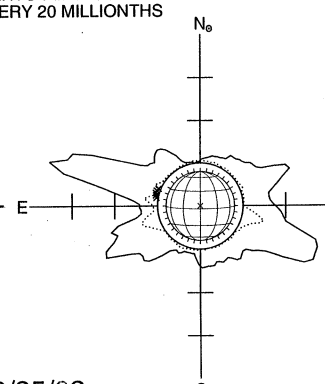

-------W

10/25/02
(DOY 298)

FE XIV 20:57 UT 1.15 $R_\odot$
FE X 17:06 UT 1.15 $R_\odot$
xxxxx CA XV 16:28 UT 1.15 $R_\odot$

S