# OCTOBER 10, 2002 ( P= 26.29, Bo = 6.23 Lo = 316.21)

## KITT PEAK MAGNETOGRAM

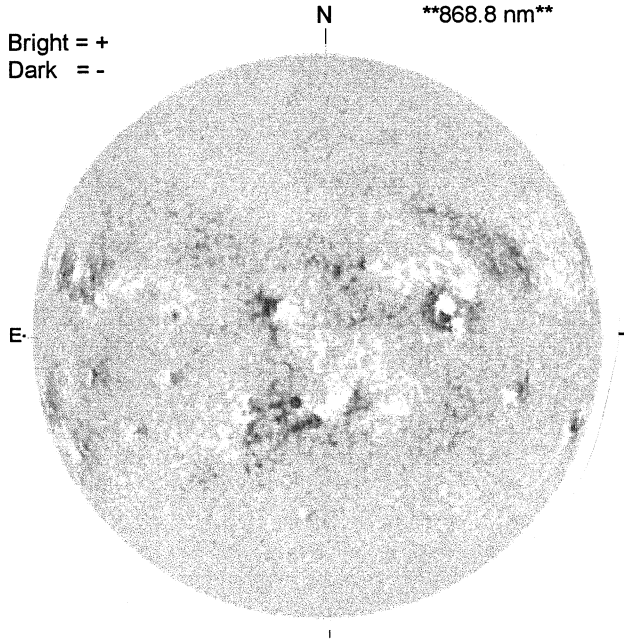


## STANFORD MAGNETOGRAM

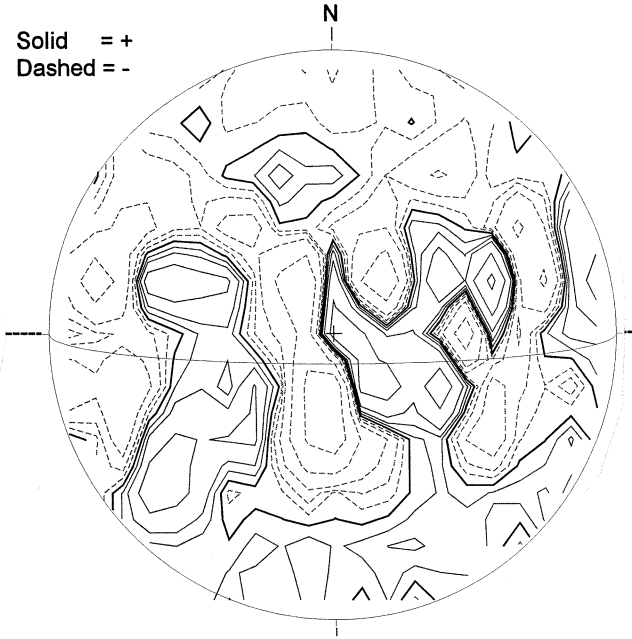


## MT. WILSON MAGNETOGRAM

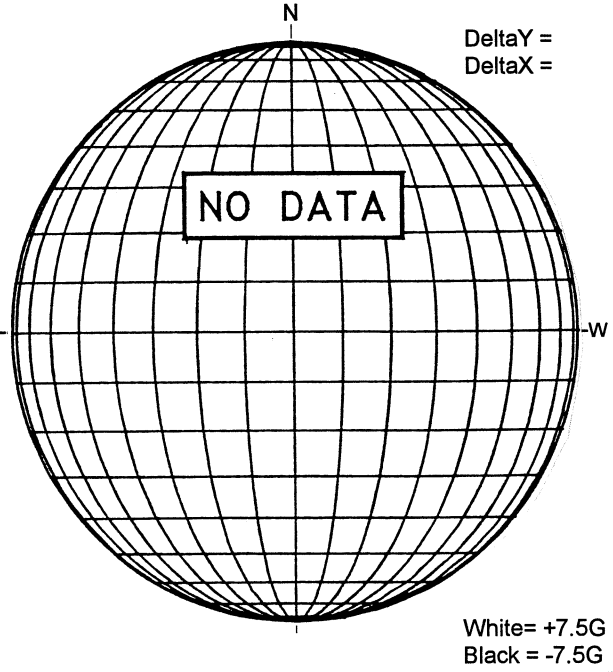


## BIG BEAR H-ALPHA

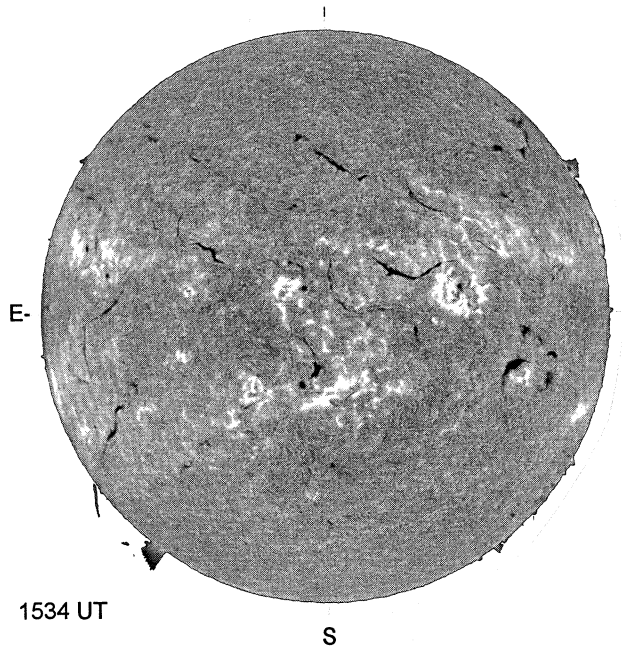


## RAMEY SUNSPOTS

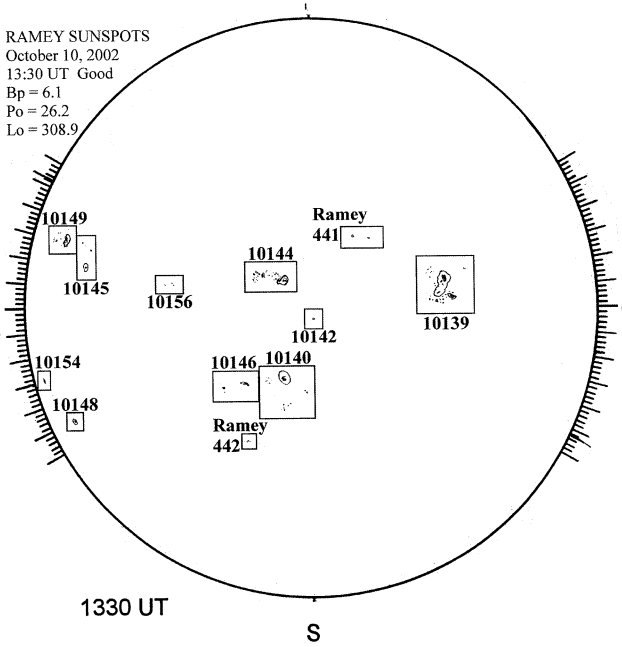

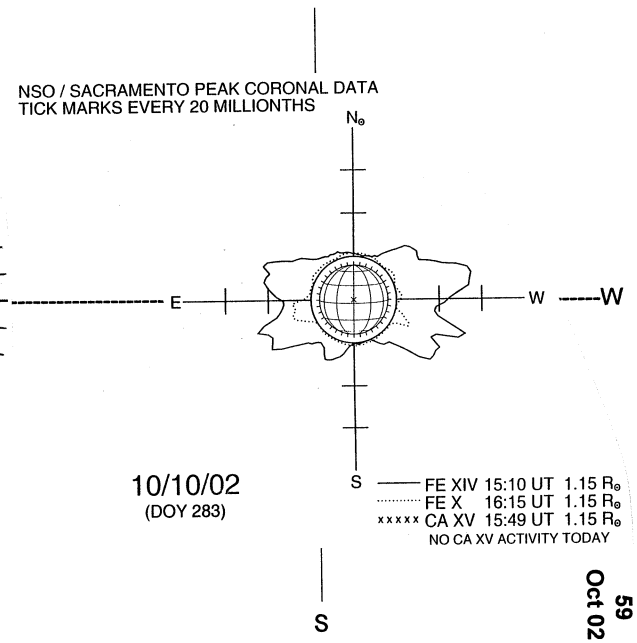
## SACRAMENTO PEAK CORONA (1.15 Radii)----