OCTOBER 9, 2002 (P= 26.28, Bo = 6.29, Lo = 329.40)

KITT PEAK MAGNETOGRAM

N **868.8 nm

Bright = +
Dark = -

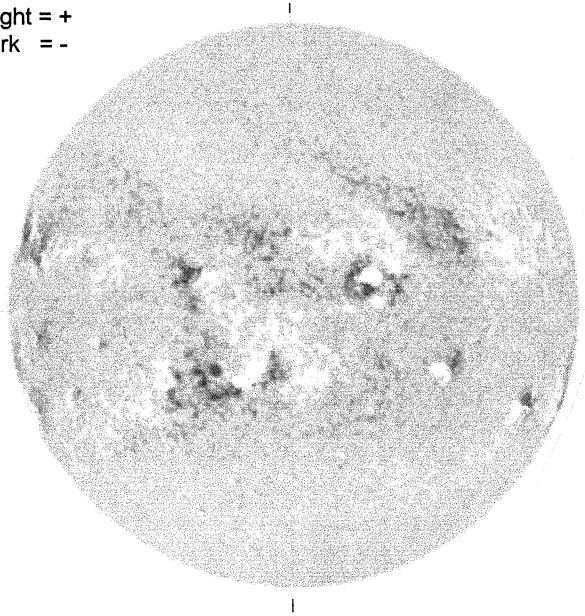

E--

1702 UT

STANFORD MAGNETOGRAM

N

Solid = +
Dashed = -

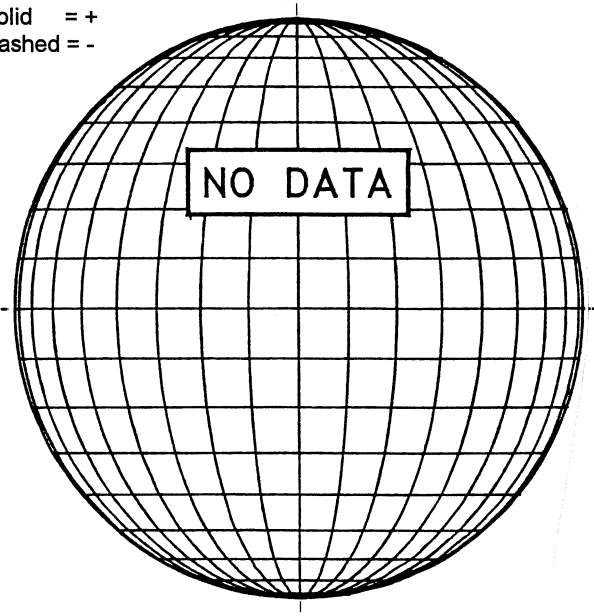

MT. WILSON MAGNETOGRAM

N

DeltaY = 13.1
DeltaX = 9.6

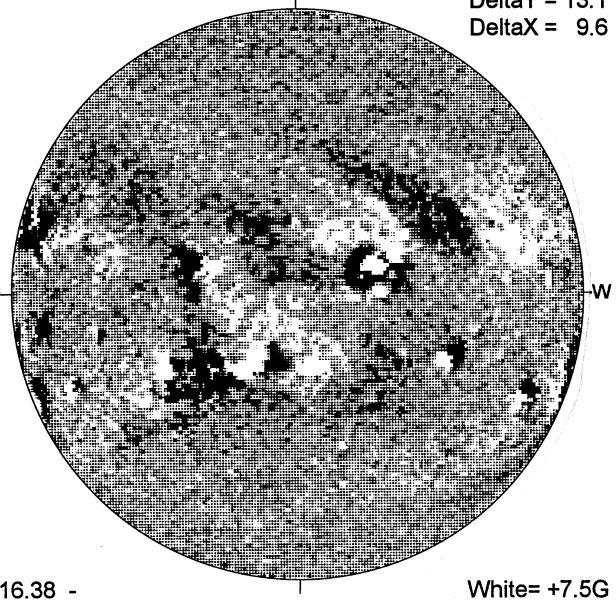

-W

16.38 -
17.33 UT

White= +7.5G
Black = -7.5G

BIG BEAR H-ALPHA

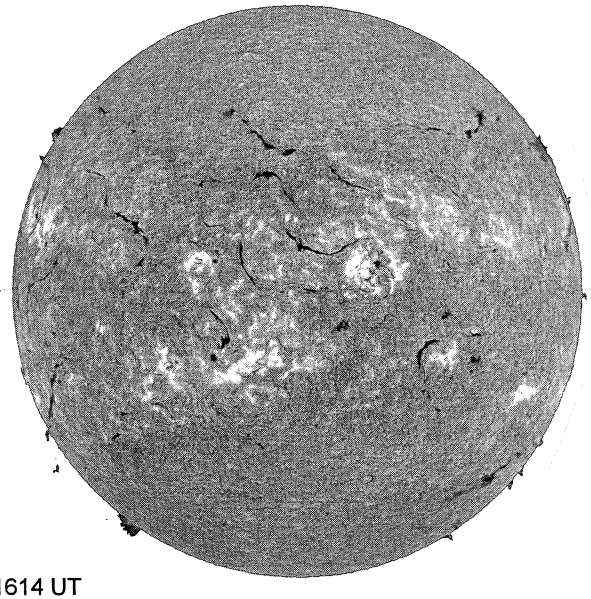

E

1614 UT

S

RAMEY SUNSPOT

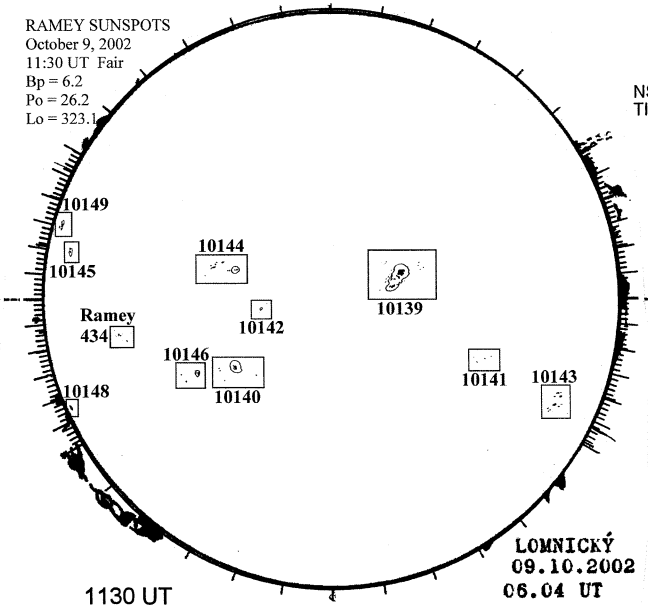

1130 UT
0604 UT LOMN Prom

S

SACRAMENTO PEAK CORONA (1.15 Radii)----

NSO / SACRAMENTO PEAK CORONAL DATA
TICK MARKS EVERY 20 MILLIONTHS

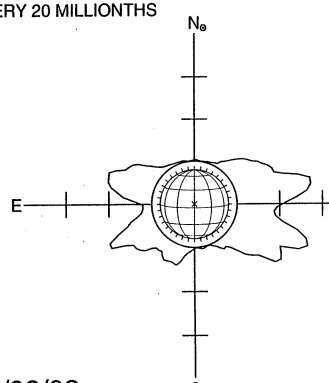

-----W

10/09/02
(DOY 282)

FE XIV 18:20 UT 1.15 R⊙

S