SEPTEMBER 30, 2002 (P= 25.89, Bo = 6.77, Lo = 88.15)

KITT PEAK MAGNETOGRAM

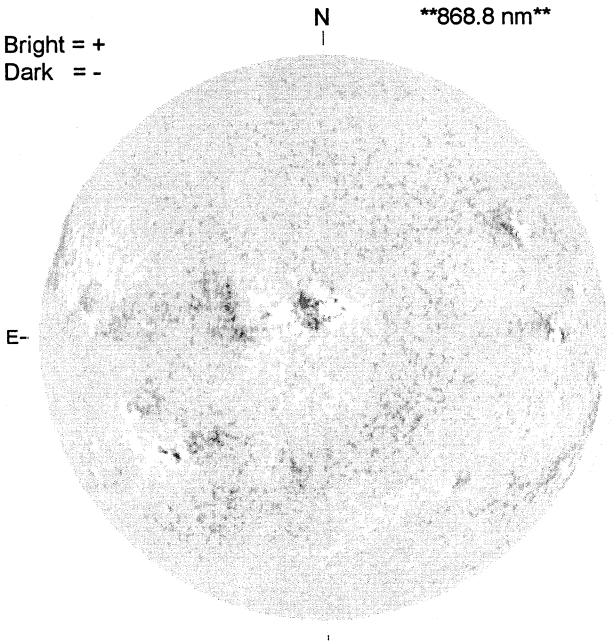

STANFORD MAGNETOGRAM

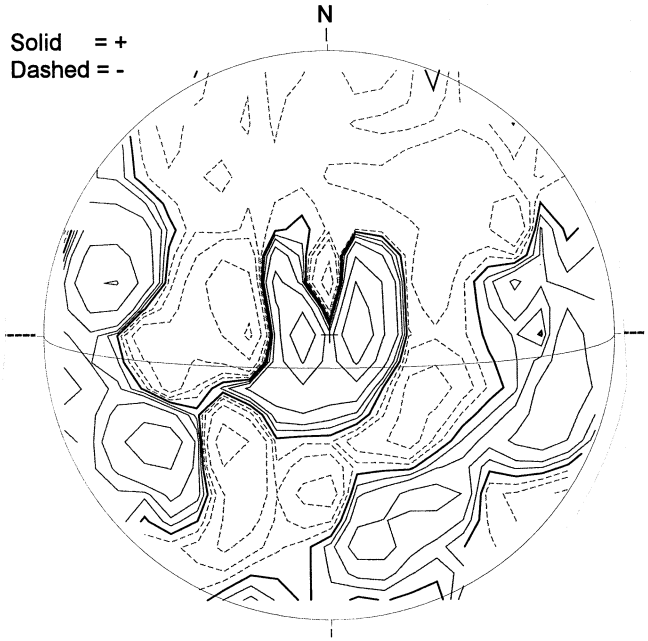

MT. WILSON MAGNETOGRAM

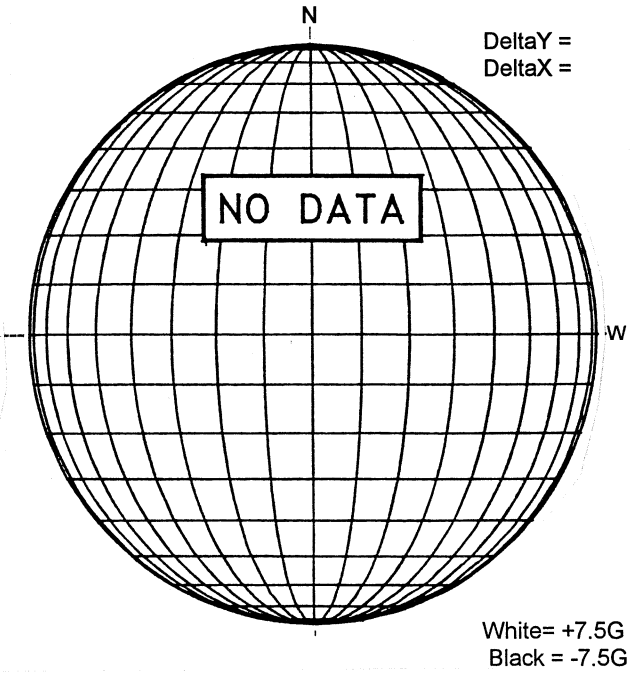

BIG BEAR H-ALPHA

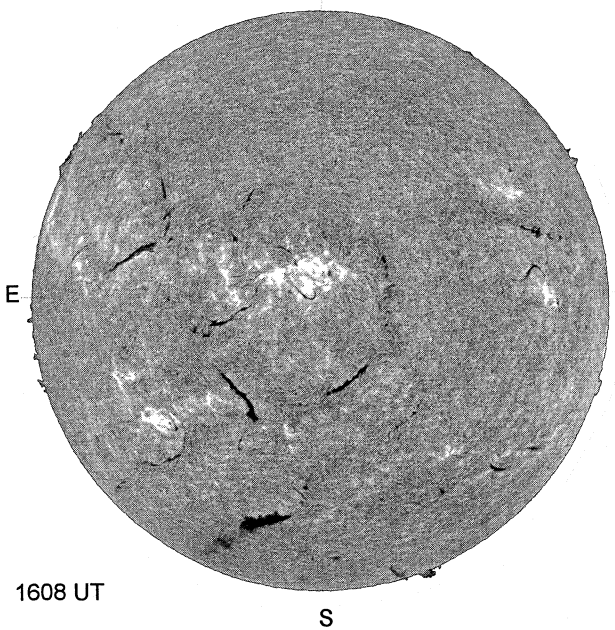

RAMEY SUNSPOT

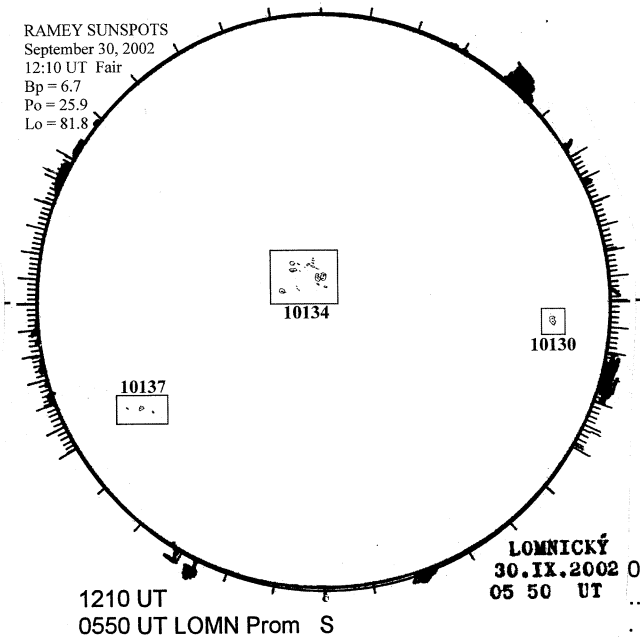
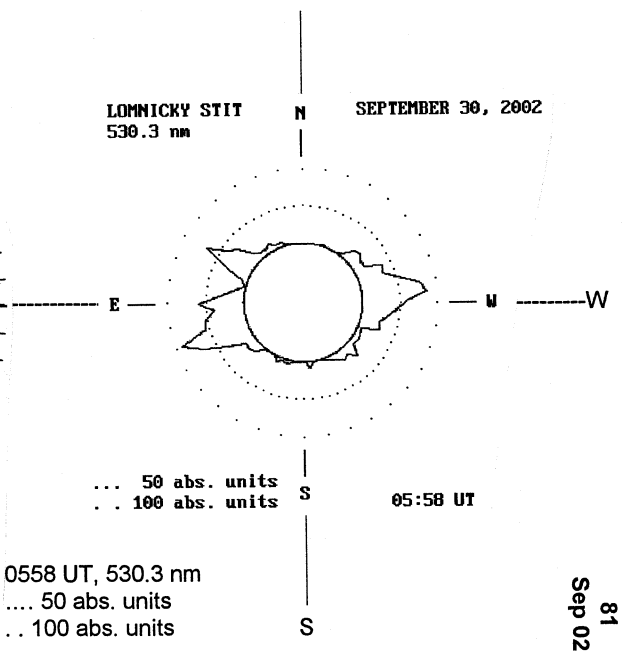
LOMNICKY PEAK CORONA (1.04 Radii)----