SEPTEMBER 27, 2002 (P= 25.64, Bo = 6.90, Lo = 127.74)

KITT PEAK MAGNETOGRAM

Bright = +
Dark = -

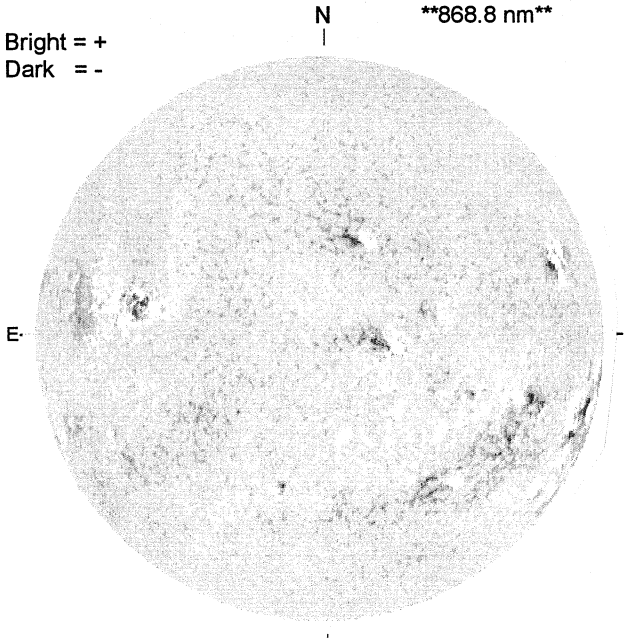

1540 UT

STANFORD MAGNETOGRAM

Solid = +
Dashed = -

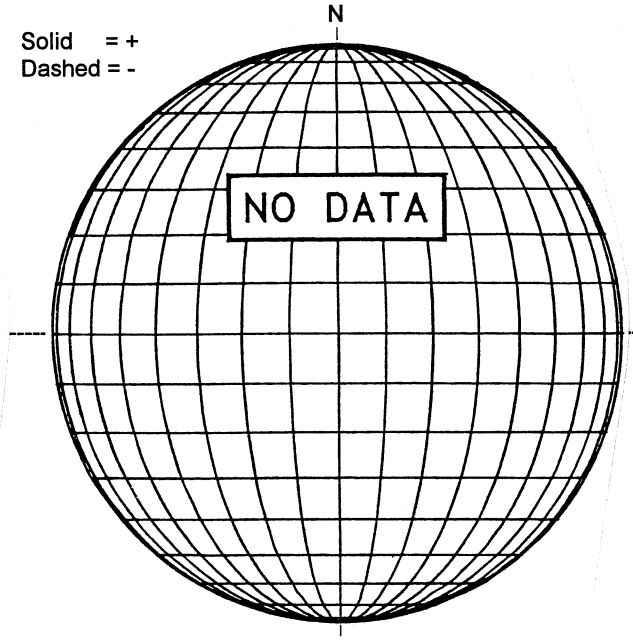

16.00 -
16.95 UT

MT. WILSON MAGNETOGRAM

DeltaY = 13.0
DeltaX = 9.6

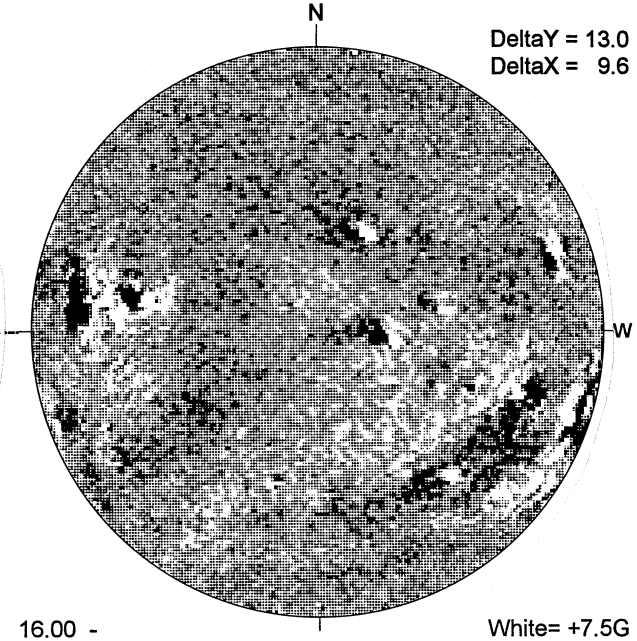

White= +7.5G
Black = -7.5G

MEUDON H-ALPHA

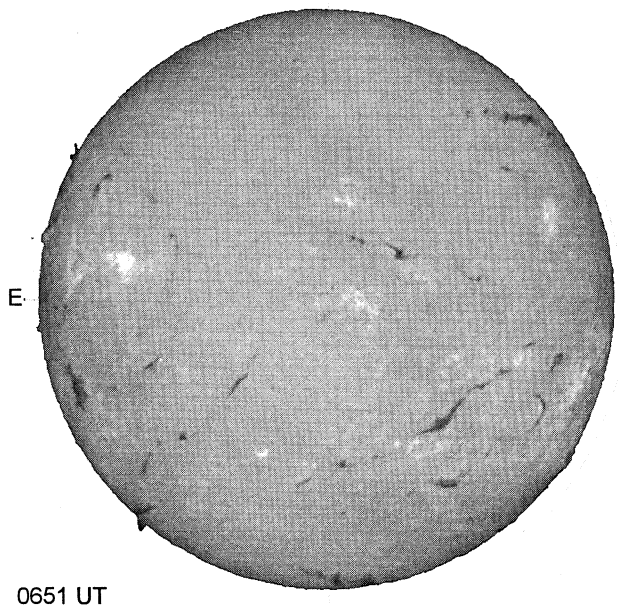

0651 UT

HOLLOMAN SUNSPOT

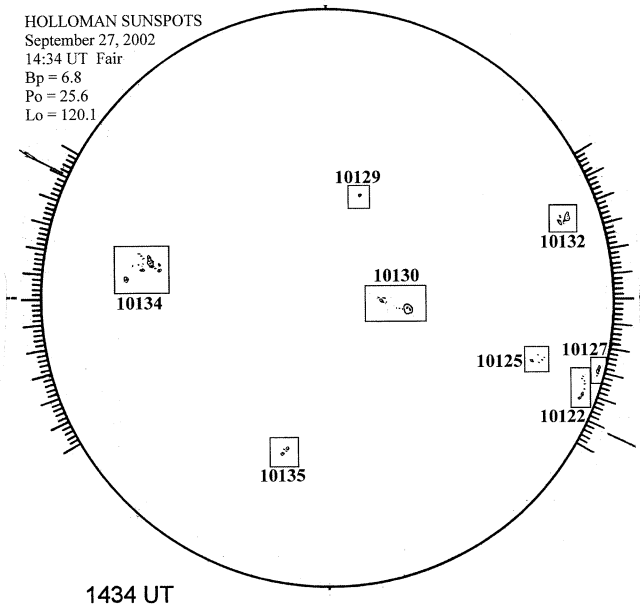

1434 UT

SACRAMENTO PEAK CORONA (1.15 Radii)

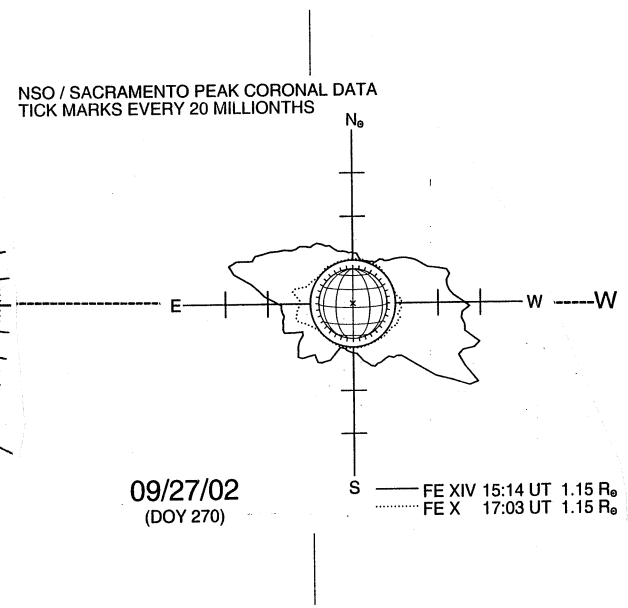

09/27/02
(DOY 270)