SEPTEMBER 26, 2002 (P= 25.54, Bo = 6.94, Lo = 140.94)

KITT PEAK MAGNETOGRAM

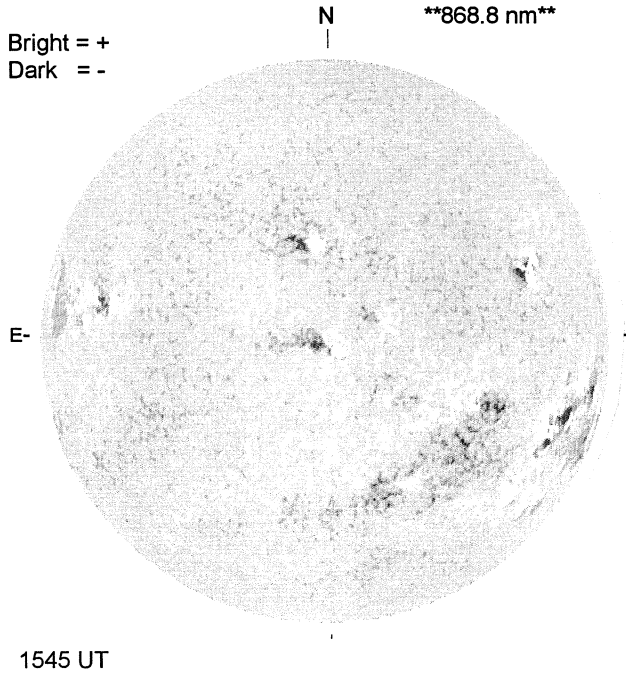

STANFORD MAGNETOGRAM

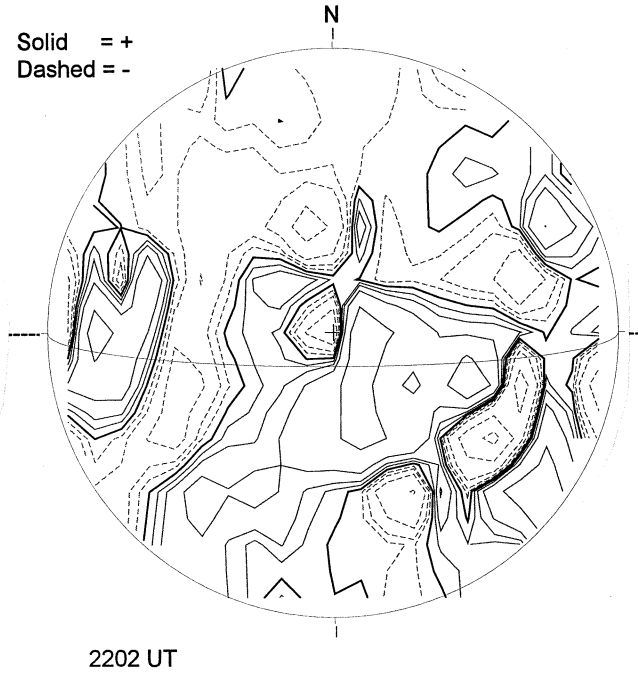

MT. WILSON MAGNETOGRAM

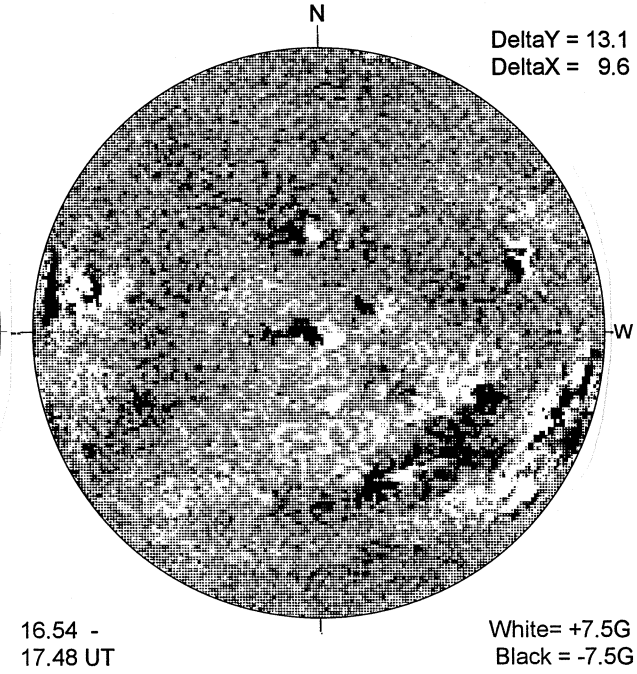

MEUDON H-ALPHA

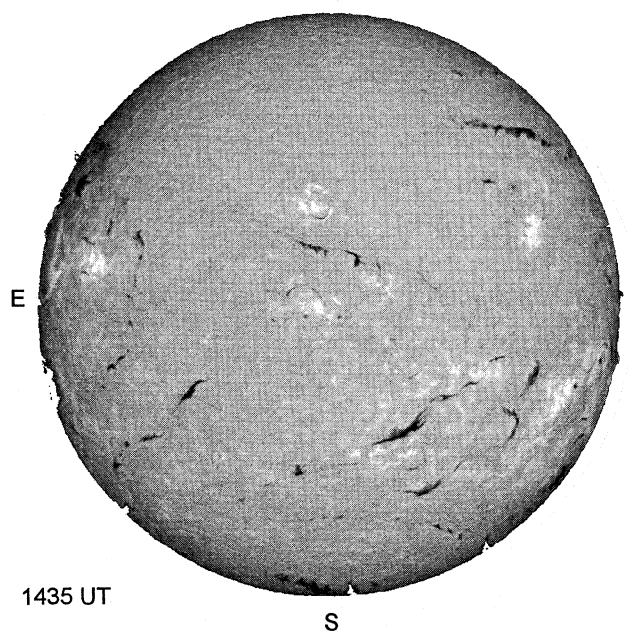

HOLLOMAN SUNSPOT

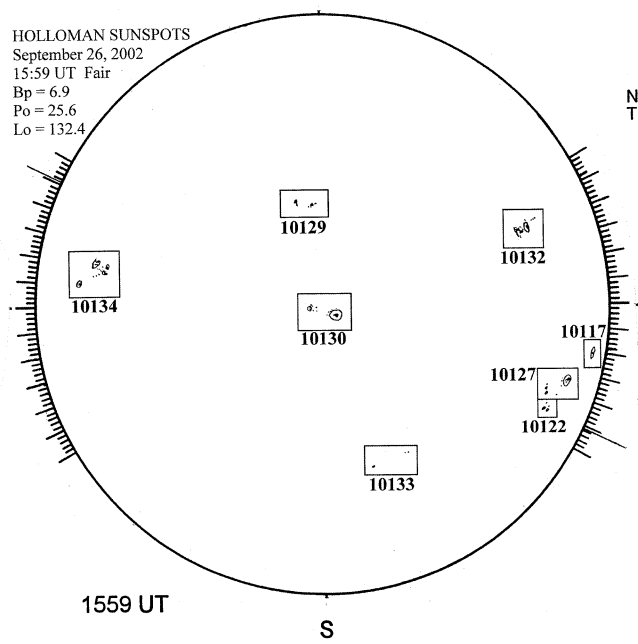

SACRAMENTO PEAK CORONA (1.15 Radii)----

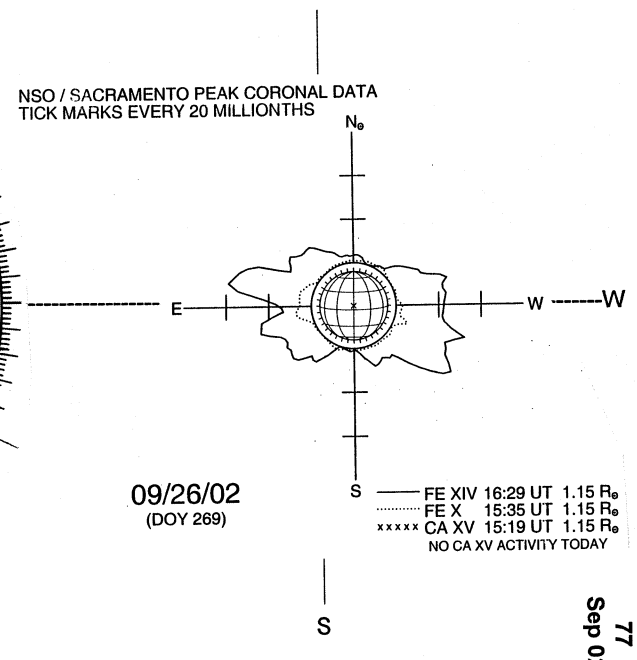

77
Sep 02