SEPTEMBER 24, 2002 (P= 25.32, Bo = 7.00, Lo = 167.33)

KITT PEAK MAGNETOGRAM

868.8 nm

Bright = +
Dark = -

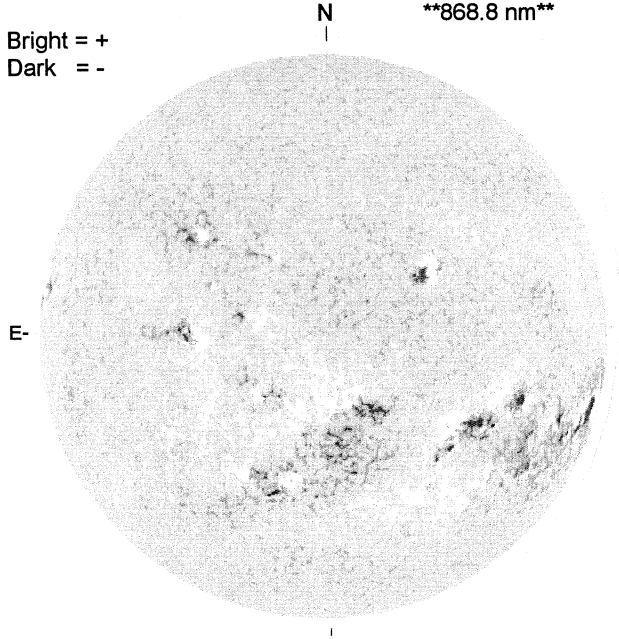

1550 UT

STANFORD MAGNETOGRAM

Solid = +
Dashed = -

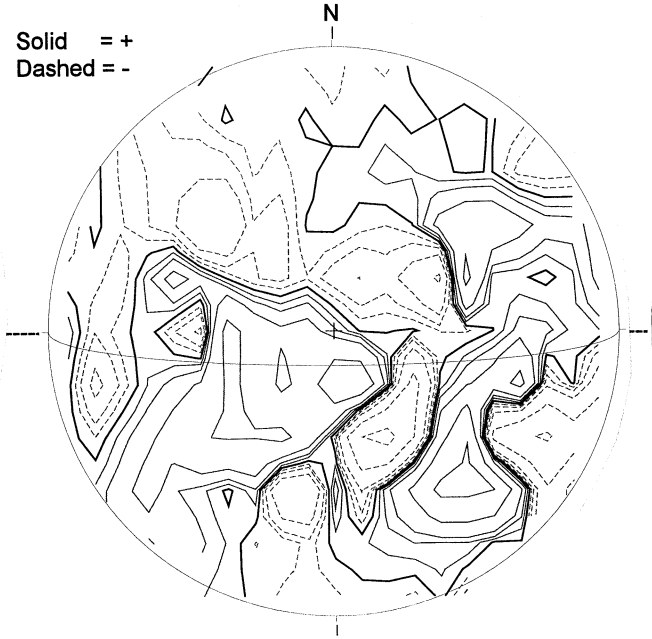

2342 UT

MT. WILSON MAGNETOGRAM

DeltaY =
DeltaX =

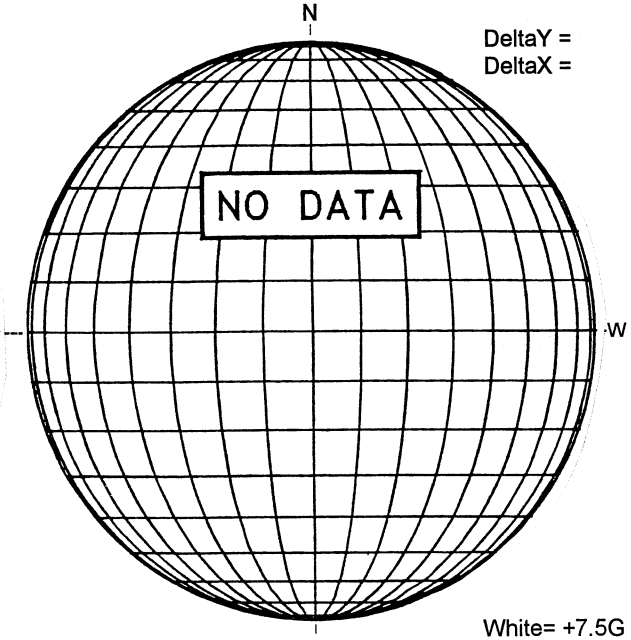

White= +7.5G
Black = -7.5G

BIG BEAR H-ALPHA

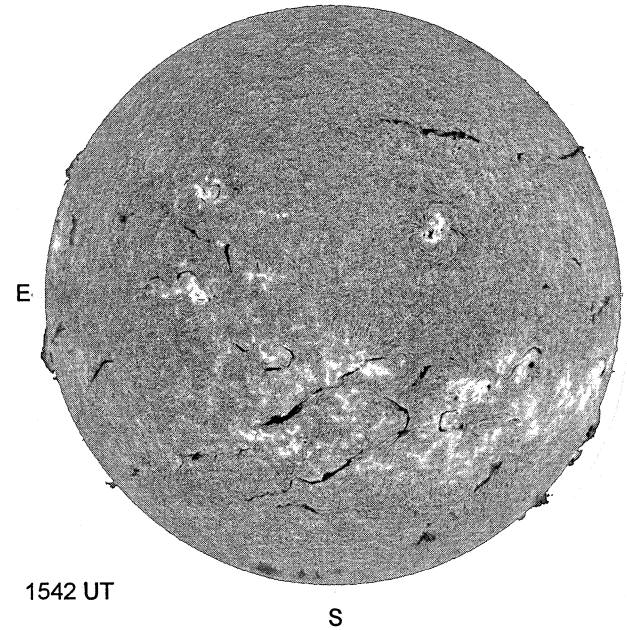

1542 UT

RAMEY SUNSPOT

RAMEY SUNSPOTS
September 24, 2002
13:10 UT Fair
Bp = 6.9
Po = 25.3
Lo = 160.4

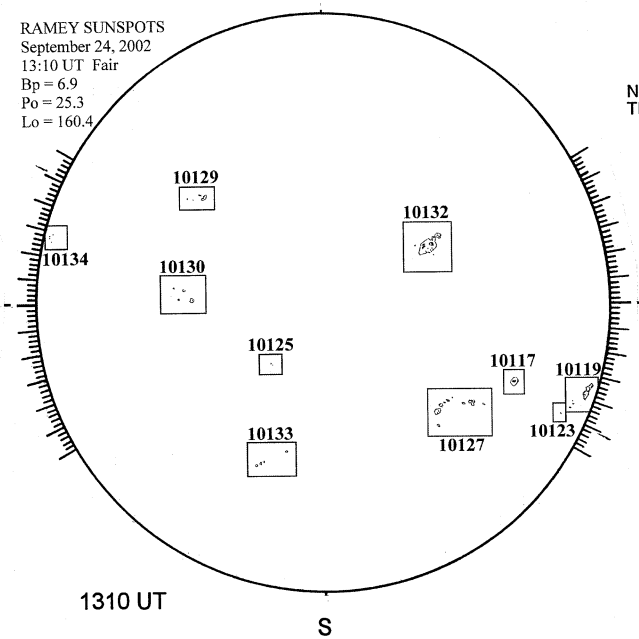

1310 UT

SACRAMENTO PEAK CORONA (1.15 Radii)

NSO / SACRAMENTO PEAK CORONAL DATA
TICK MARKS EVERY 20 MILLIONTHS

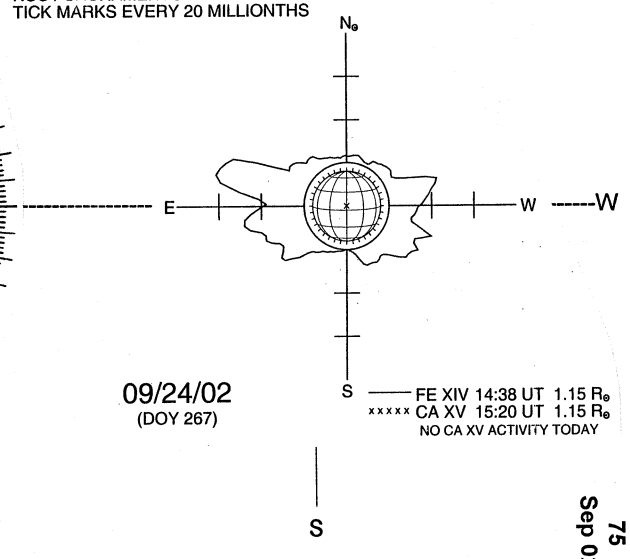

09/24/02
(DOY 267)

FE XIV 14:38 UT 1.15 $R_\odot$
xxxxx CA XV 15:20 UT 1.15 $R_\odot$
NO CA XV ACTIVITY TODAY