SEPTEMBER 12, 2002 (P= 23.48, Bo = 7.24 Lo = 325.75)

KITT PEAK MAGNETOGRAM

N **868.8 nm**

Bright = +
Dark = -

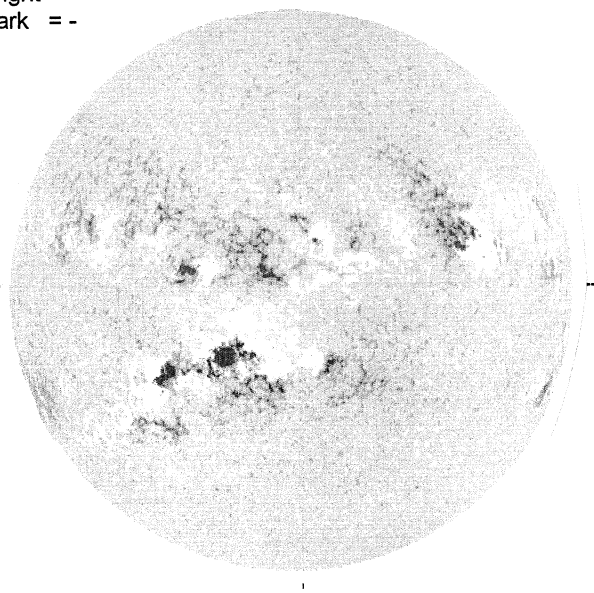

E-

1539 UT

STANFORD MAGNETOGRAM

N

Solid = +
Dashed = -

1822 UT

MT. WILSON MAGNETOGRAM

N

DeltaY = 13.1
DeltaX = 9.6

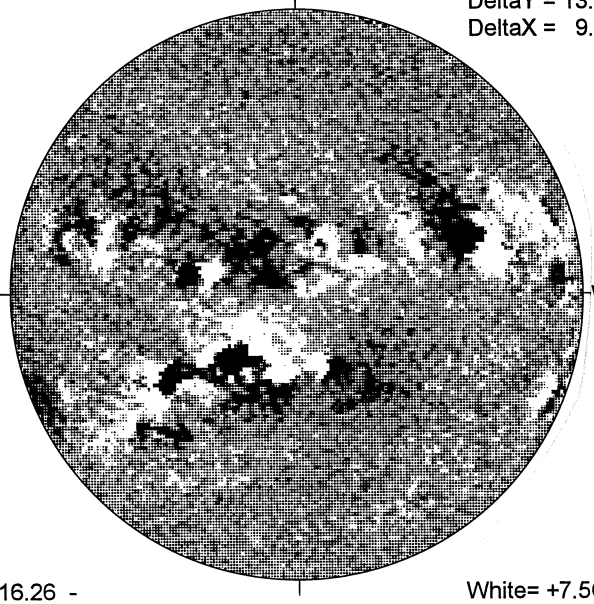

W

16.26 -
17.20 UT

White= +7.5G
Black = -7.5G

BIG BEAR H-ALPHA

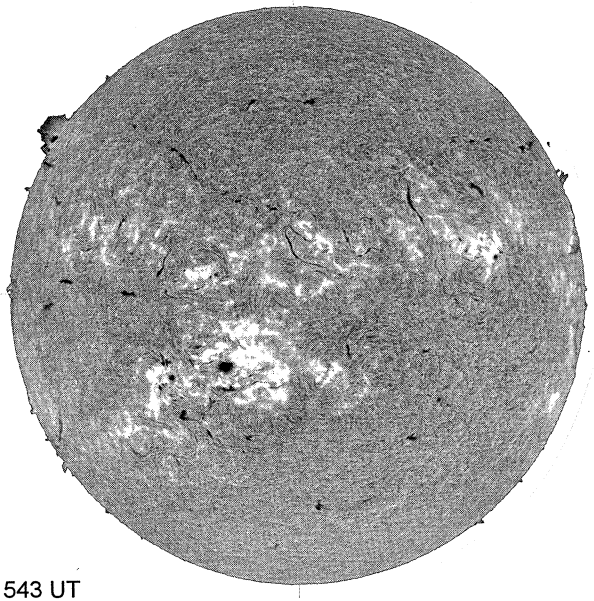

E

1543 UT

S

RAMEY SUNSPOTS

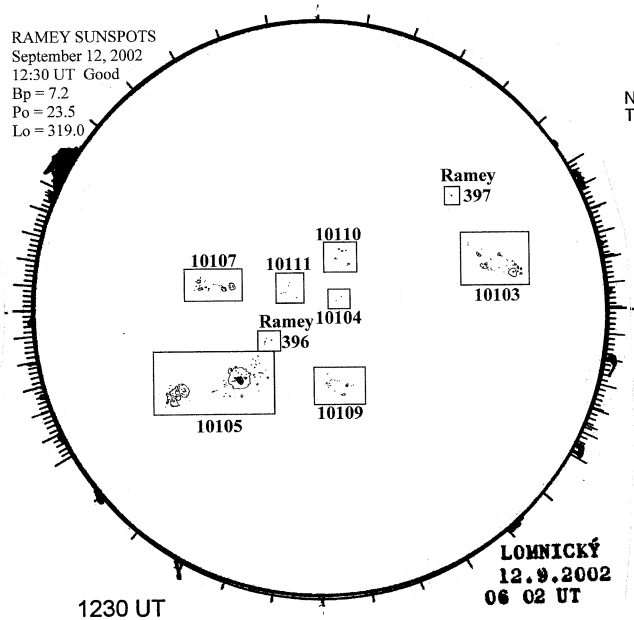

1230 UT
0602 UT LOMN Prom S

SACRAMENTO PEAK CORONA (1.15 Radii)----

NSO / SACRAMENTO PEAK CORONAL DATA
TICK MARKS EVERY 20 MILLIONTHS

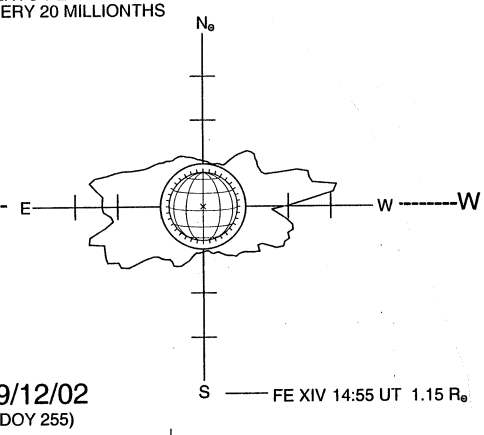

09/12/02
(DOY 255)

S

63
Sep 02