**SEPTEMBER 6, 2002 ( P= 22.22, Bo = 7.24, Lo = 44.98)**

KITT PEAK MAGNETOGRAM

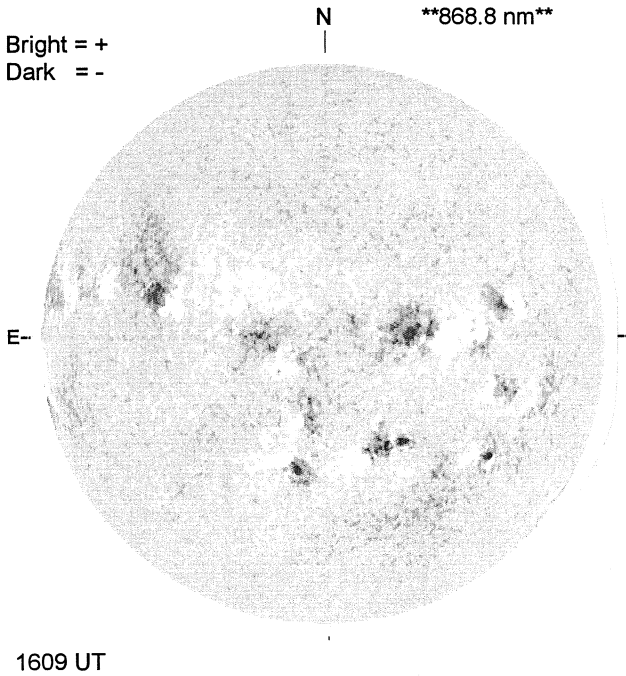


STANFORD MAGNETOGRAM

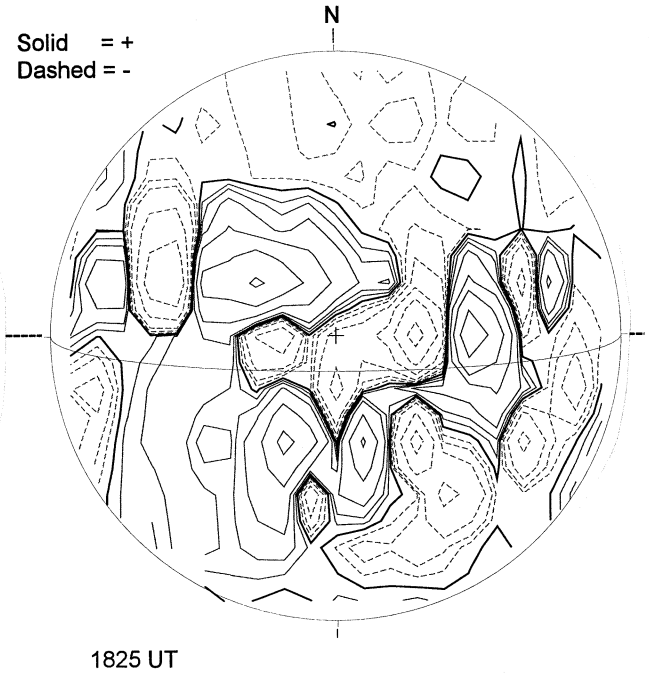


MT. WILSON MAGNETOGRAM

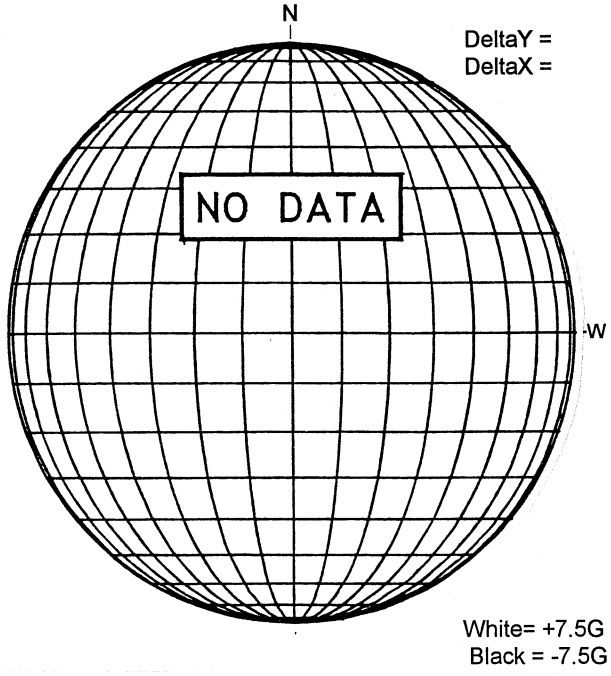


MEUDON H-ALPHA

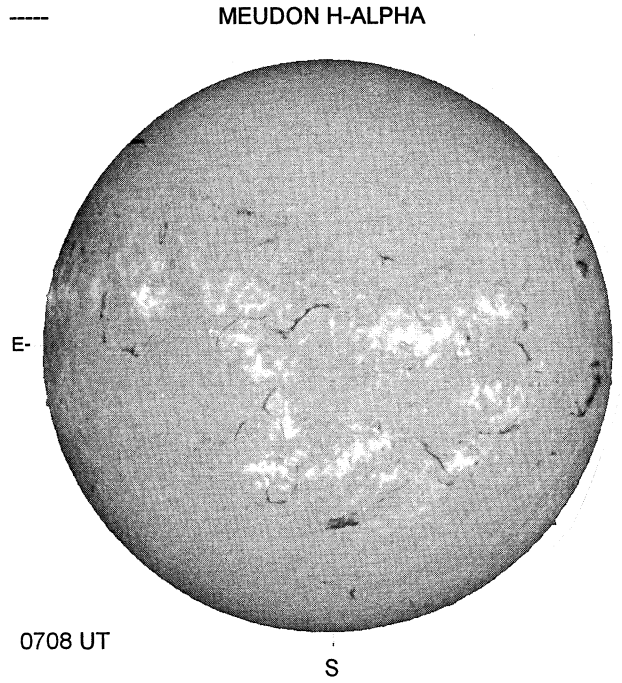


RAMEY SUNSPOT

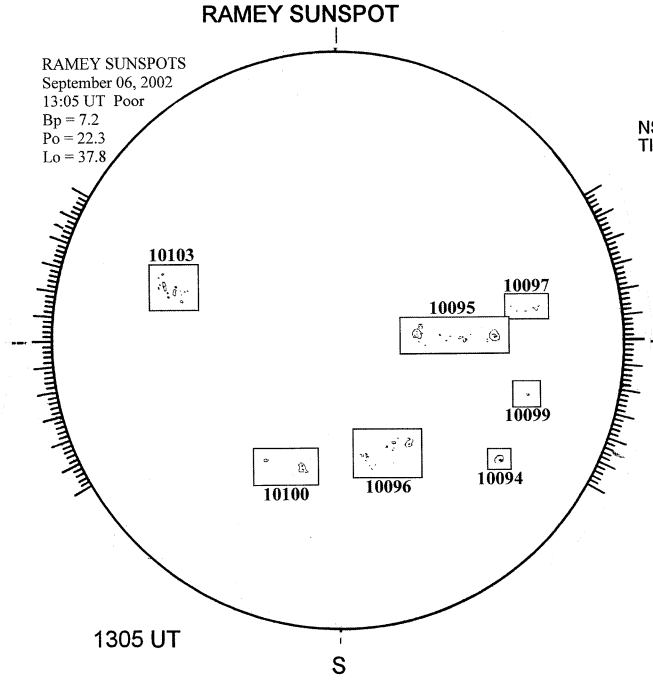

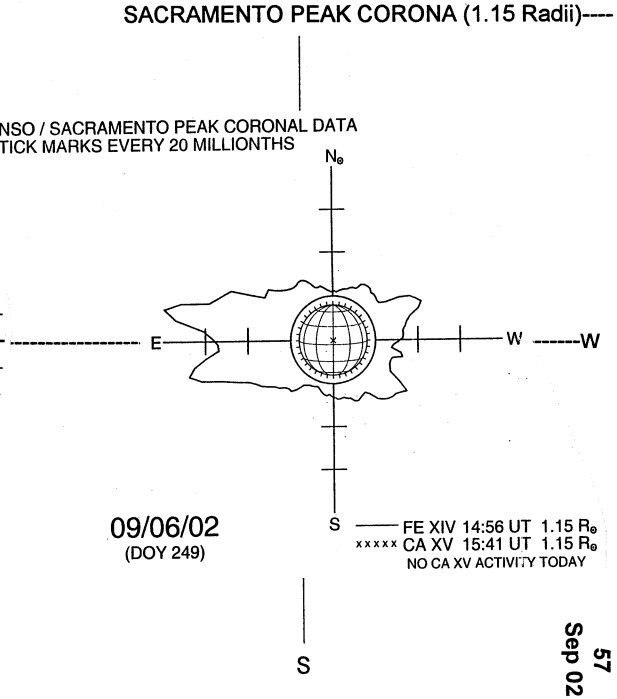
SACRAMENTO PEAK CORONA (1.15 Radii)----