SEPTEMBER 5, 2002 (P= 21.99, Bo = 7.24, Lo = 58.19)

KITT PEAK MAGNETOGRAM

868.8 nm

Bright = +
Dark = -

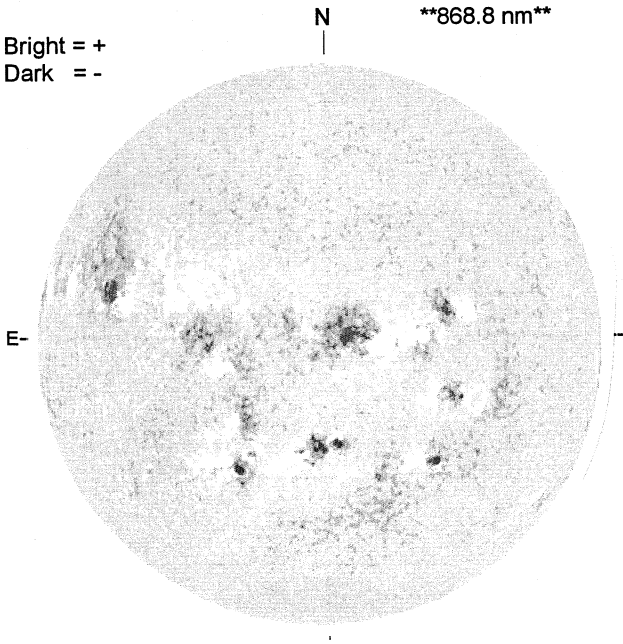

1707 UT

STANFORD MAGNETOGRAM

Solid = +
Dashed = -

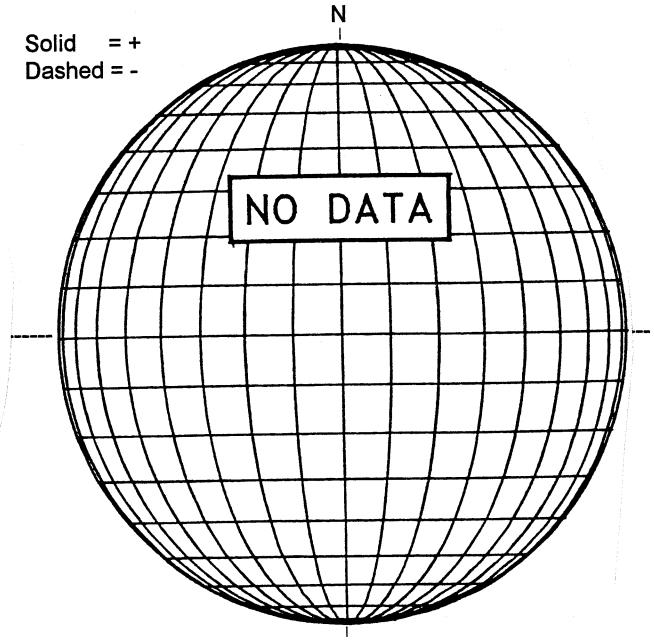

MT. WILSON MAGNETOGRAM

DeltaY =
DeltaX =

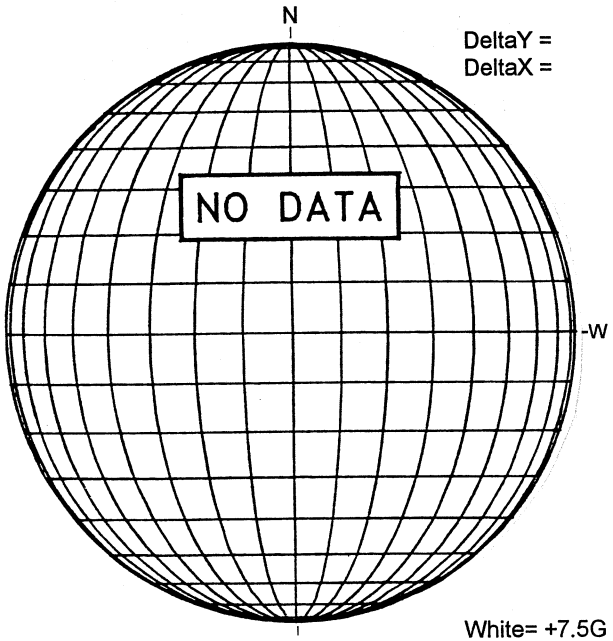

White= +7.5G
Black = -7.5G

MEUDON H-ALPHA

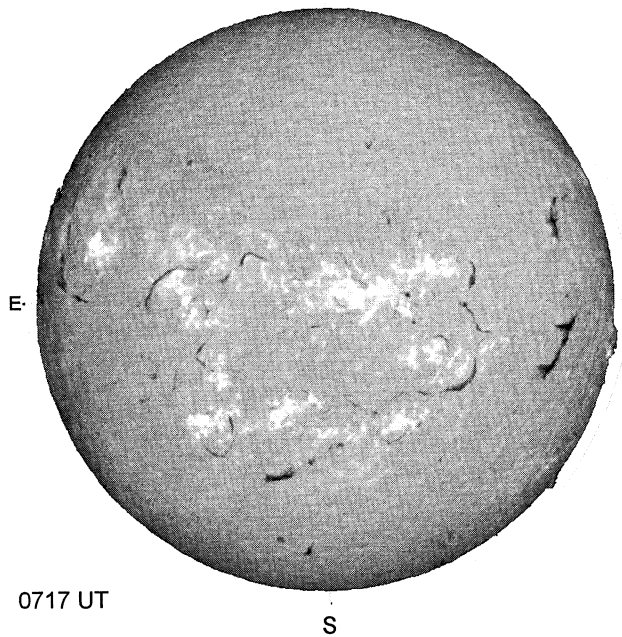

0717 UT

RAMEY SUNSPOT

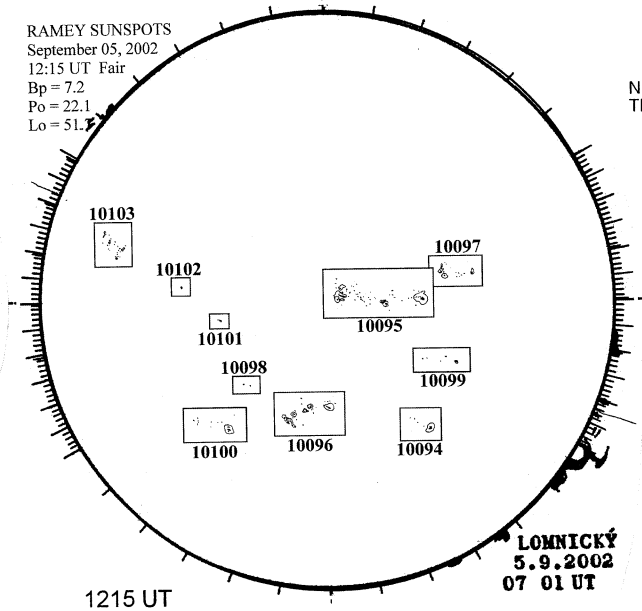

1215 UT
0701 UT LOMN Prom S

SACRAMENTO PEAK CORONA (1.15 Radii)----

NSO / SACRAMENTO PEAK CORONAL DATA
TICK MARKS EVERY 20 MILLIONTHS

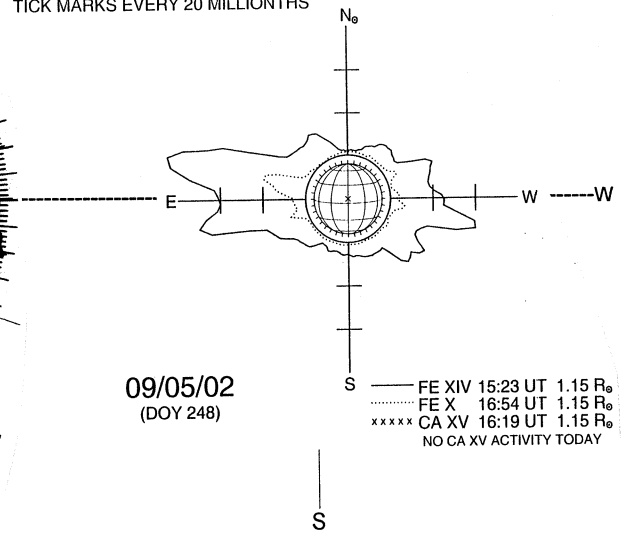

09/05/02
(DOY 248)

FE XIV 15:23 UT 1.15 R⊙
FE X 16:54 UT 1.15 R⊙
xxxxx CA XV 16:19 UT 1.15 R⊙
NO CA XV ACTIVITY TODAY