AUGUST 27, 2002 (P= 19.67, Bo = 7.09, Lo = 177.07)

KITT PEAK MAGNETOGRAM

868.8 nm

Bright = +
Dark = -

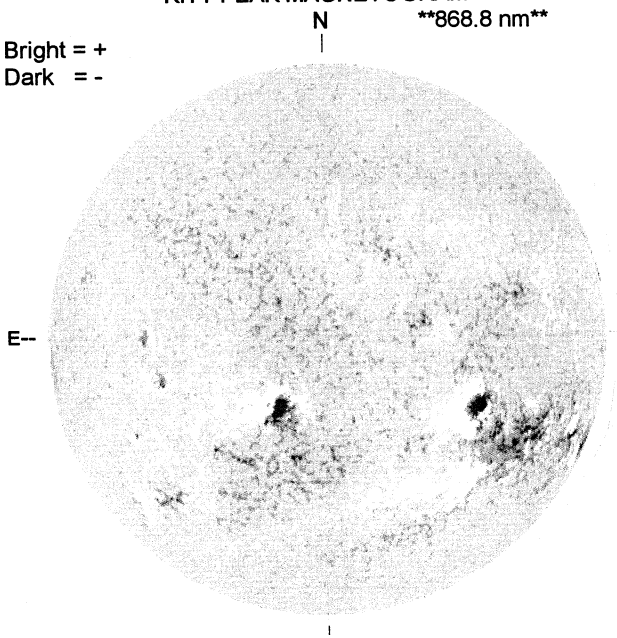

1605 UT

STANFORD MAGNETOGRAM

Solid = +
Dashed = -

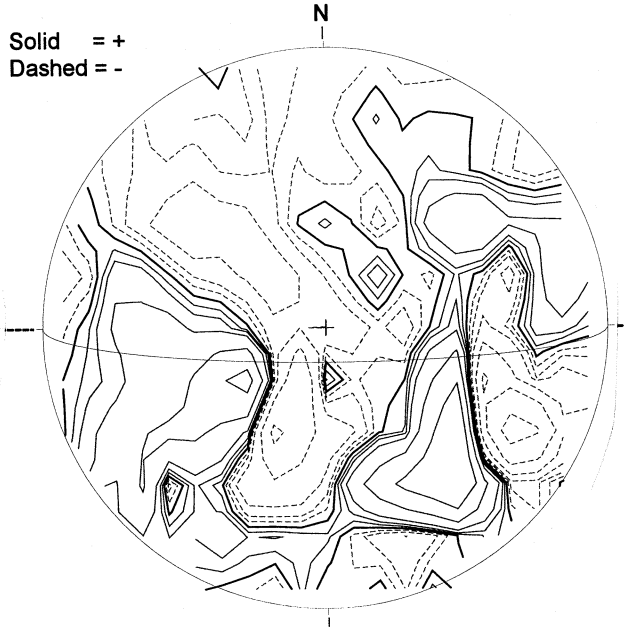

1755 UT

MT. WILSON MAGNETOGRAM

DeltaY = 13.0
DeltaX = 9.6

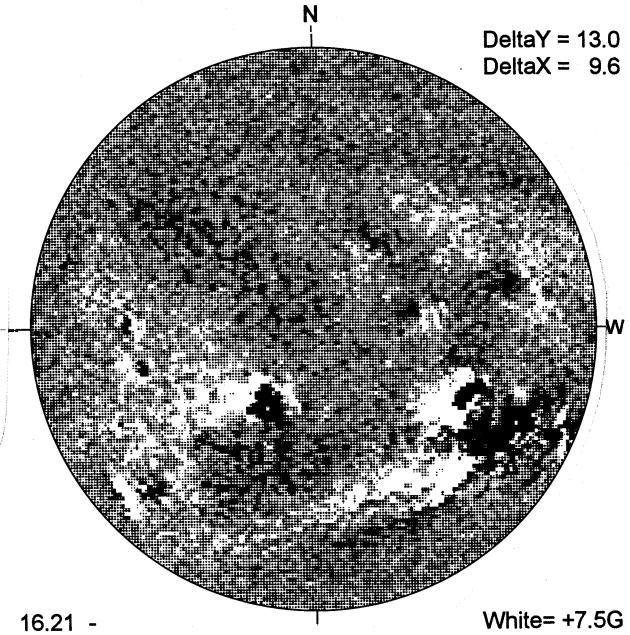

16.21 -
17.15 UT

White= +7.5G
Black = -7.5G

BIG BEAR H-ALPHA

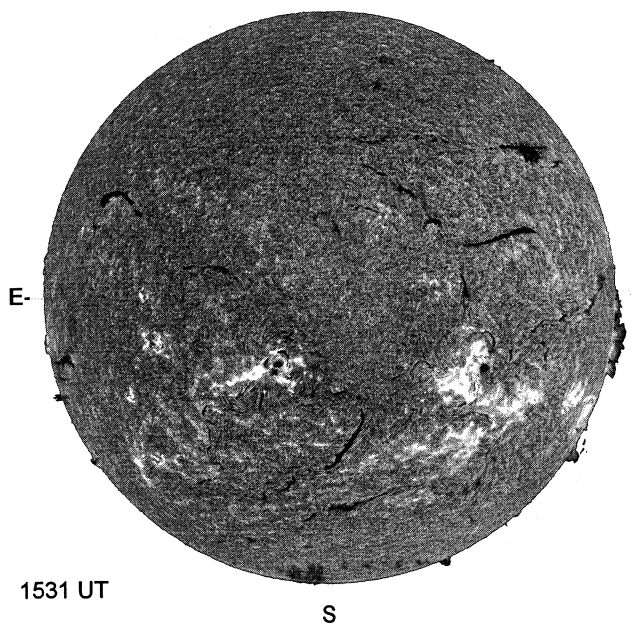

1531 UT

RAMEY SUNSPOT

RAMEY SUNSPOTS
August 27, 2002
13:23 UT V Poor
Bp = 7.1
Po = 19.8
Lo = 170.0

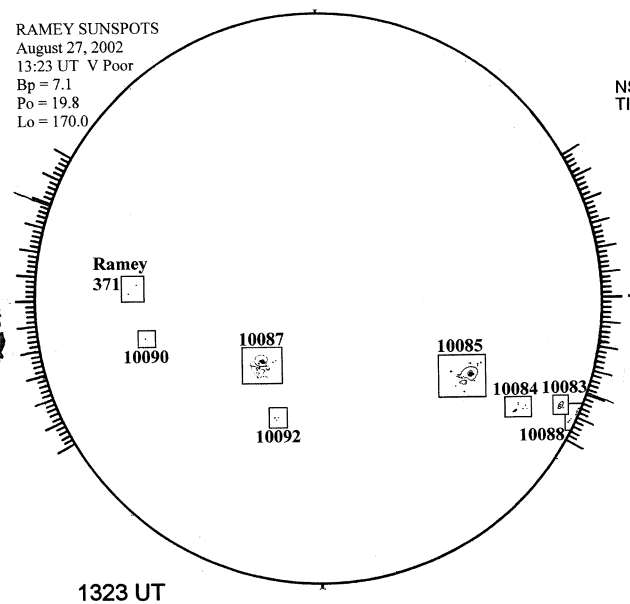

1323 UT

SACRAMENTO PEAK CORONA (1.15 Radii)

NSO / SACRAMENTO PEAK CORONAL DATA
TICK MARKS EVERY 20 MILLIONTHS

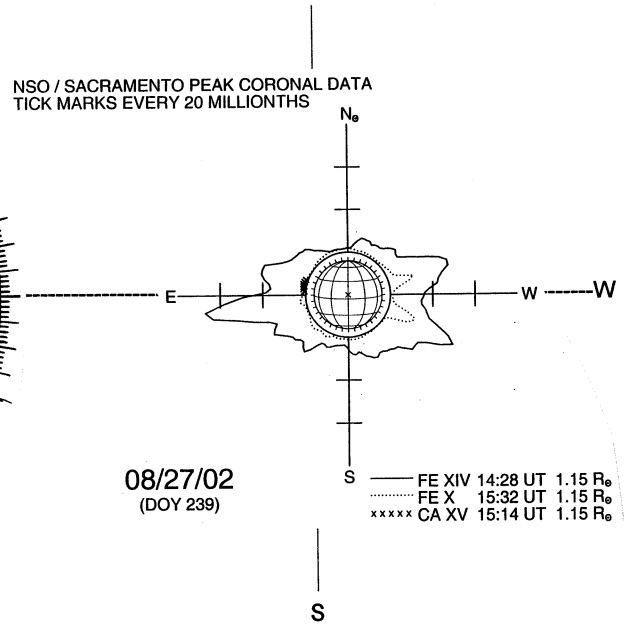

08/27/02
(DOY 239)

FE XIV 14:28 UT 1.15 Re
FE X 15:32 UT 1.15 Re
CA XV 15:14 UT 1.15 Re