AUGUST 23, 2002 (P= 18.51, Bo = 6.97, Lo = 229.93)

KITT PEAK MAGNETOGRAM

N

868.8 nm

Bright = +
Dark = -

E--

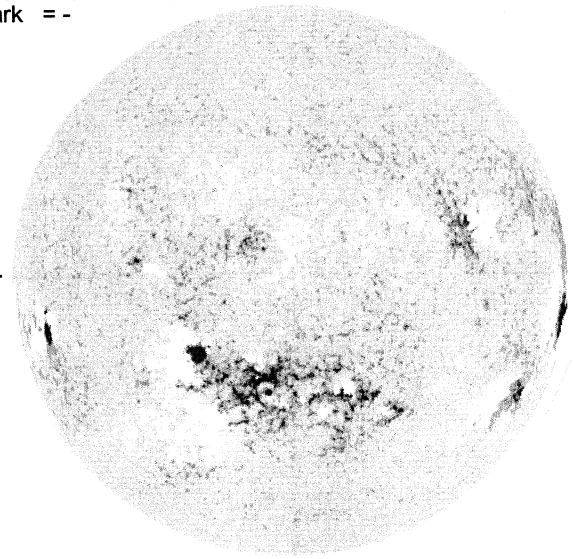

1416 UT

STANFORD MAGNETOGRAM

N

Solid = +
Dashed = -

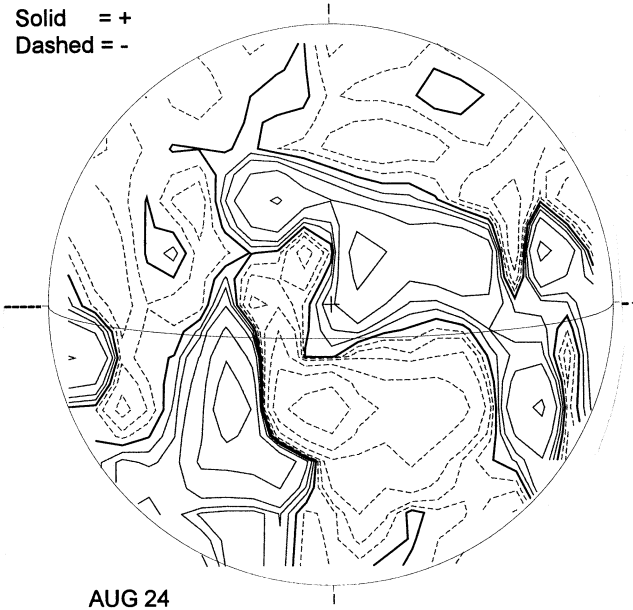

AUG 24
0008 UT

MT. WILSON MAGNETOGRAM

N

DeltaY = 13.0
DeltaX = 9.6

W

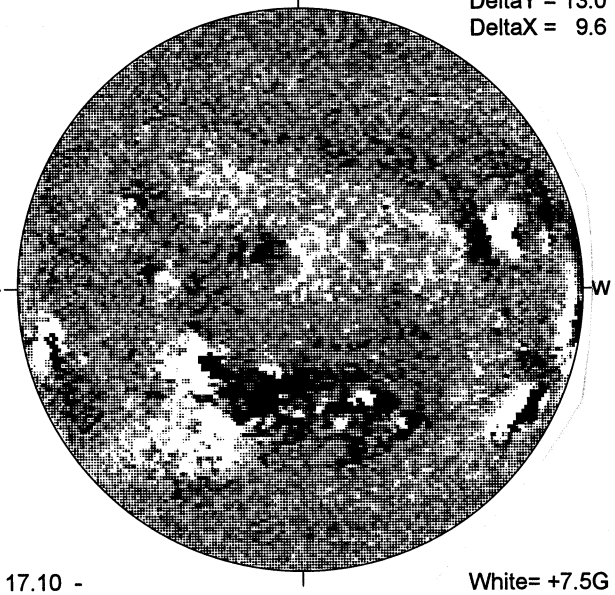

17.10 -
18.04 UT

White= +7.5G
Black = -7.5G

BIG BEAR H-ALPHA

E

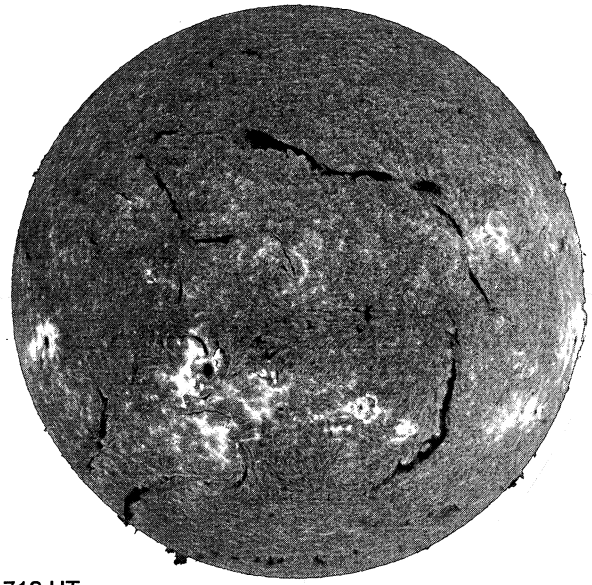

1718 UT

S

RAMEY SUNSPOT

RAMEY SUNSPOTS
August 23, 2002
11:20 UT Fair
Bp = 6.9
Po = 18.6
Lo = 223.7

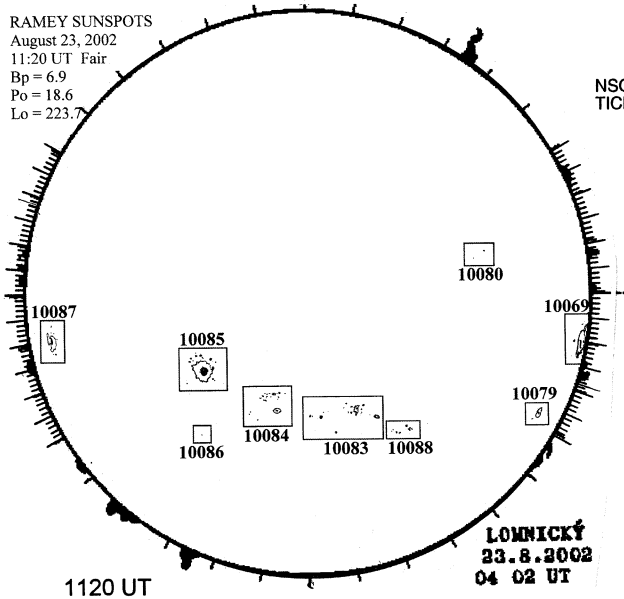

LOMNICKY
23.8.2002
04 02 UT

1120 UT
0402 UT LOMN Prom S

SACRAMENTO PEAK CORONA (1.15 Radii)----

NSO / SACRAMENTO PEAK CORONAL DATA
TICK MARKS EVERY 20 MILLIONTHS

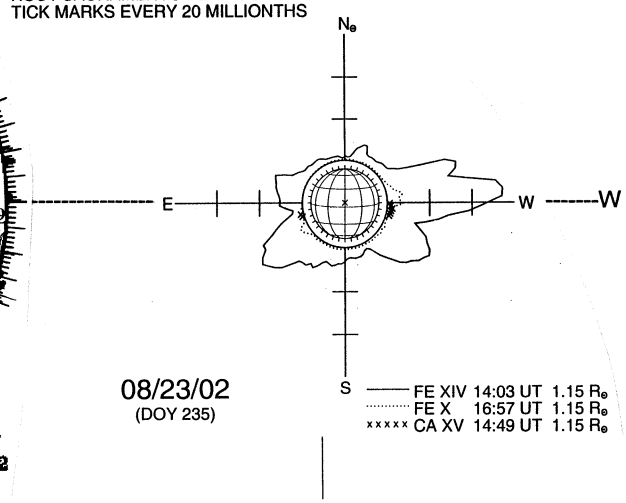

08/23/02
(DOY 235)

S