AUGUST 15, 2002 (P= 15.93, Bo = 6.63, Lo = 335.66)

KITT PEAK MAGNETOGRAM

868.8 nm

Bright = +
Dark = -

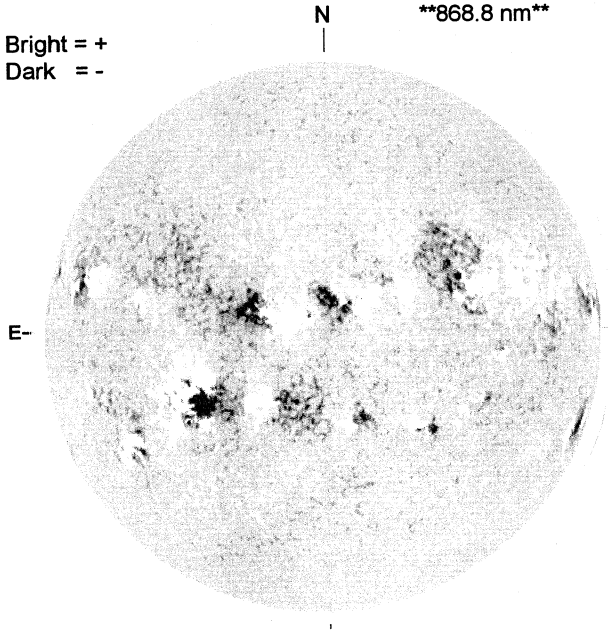

1534 UT

STANFORD MAGNETOGRAM

Solid = +
Dashed = -

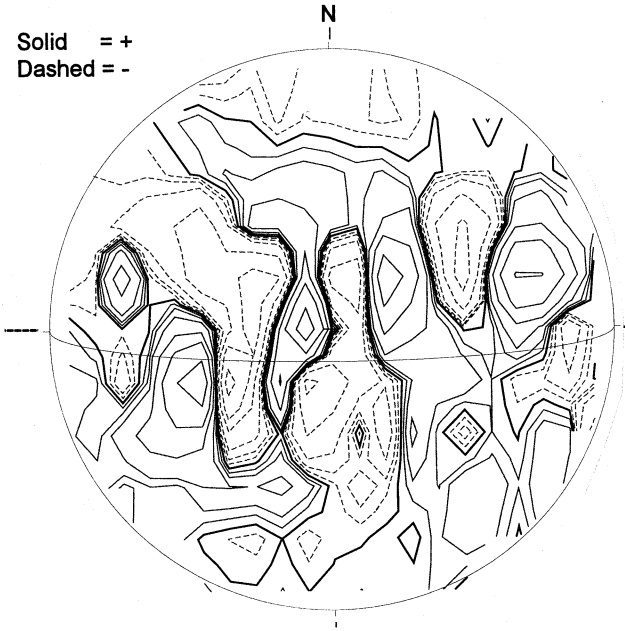

1801 UT

MT. WILSON MAGNETOGRAM

DeltaY = 13.0
DeltaX = 9.6

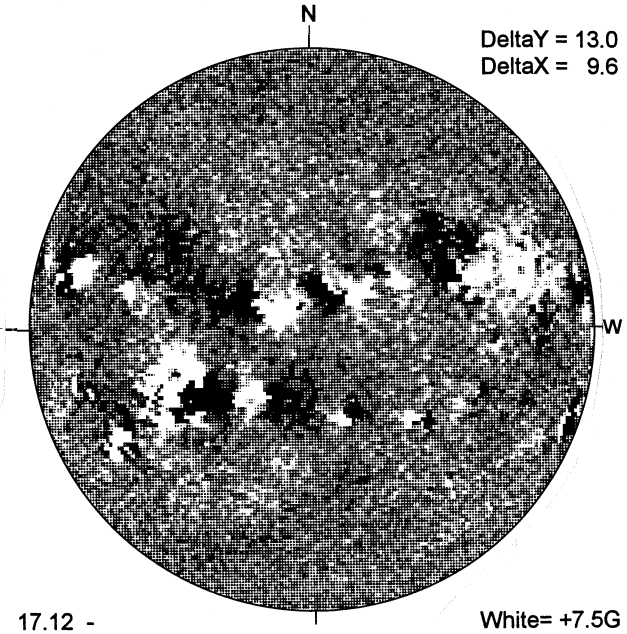

17.12 -
18.05 UT

White= +7.5G
Black = -7.5G

MEUDON H-ALPHA

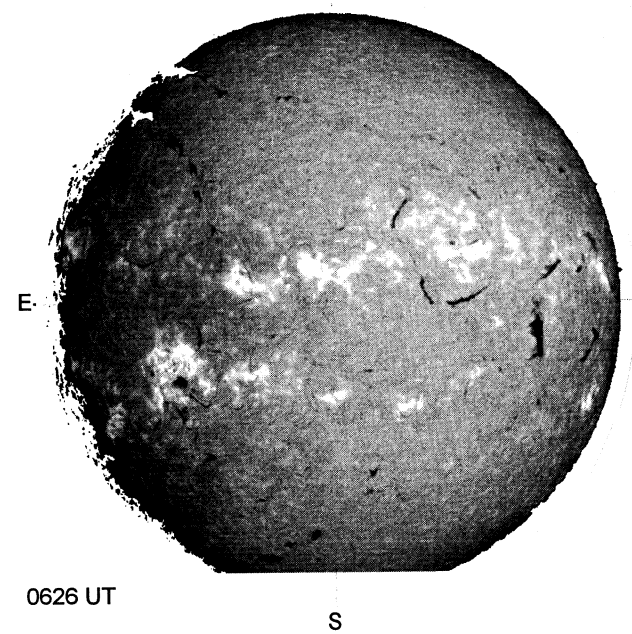

0626 UT

RAMEY SUNSPOT

RAMEY SUNSPOTS
August 15, 2002
12:30 UT Fair
Bp = 6.6
Po = 16.1
Lo = 329.0

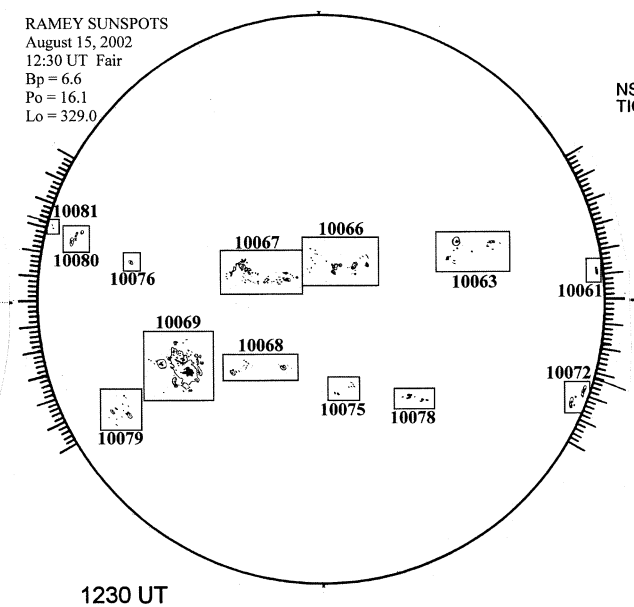

1230 UT

SACRAMENTO PEAK CORONA (1.15 Radii)

NSO / SACRAMENTO PEAK CORONAL DATA
TICK MARKS EVERY 20 MILLIONTHS

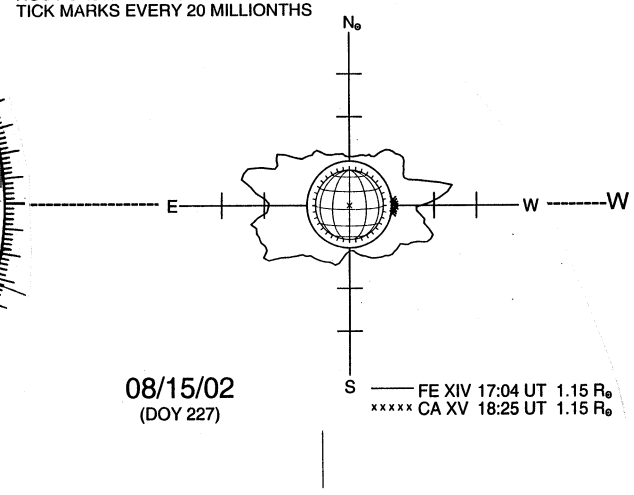

08/15/02
(DOY 227)

—— FE XIV 17:04 UT 1.15 $R_\odot$
xxxxx CA XV 18:25 UT 1.15 $R_\odot$