AUGUST 13, 2002 (P= 15.24, Bo = 6.53, Lo = 2.10)

KITT PEAK MAGNETOGRAM

868.8 nm

Bright = +
Dark = -

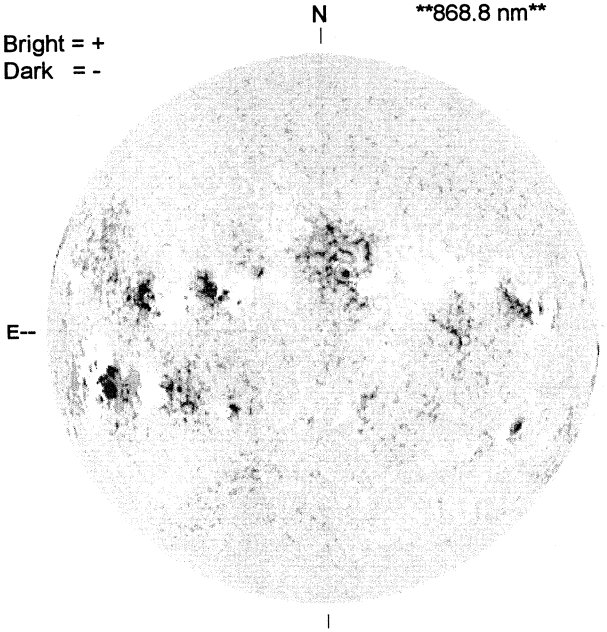

1541 UT

STANFORD MAGNETOGRAM

Solid = +
Dashed = -

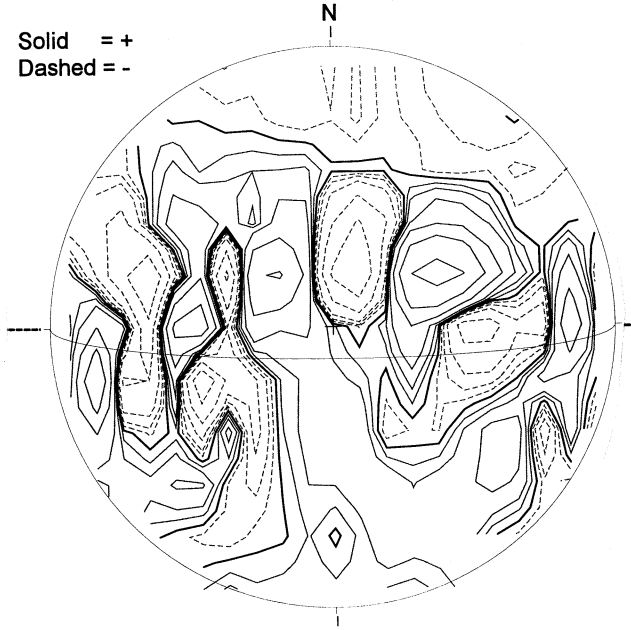

1850 UT

MT. WILSON MAGNETOGRAM

DeltaY = 13.0
DeltaX = 9.6

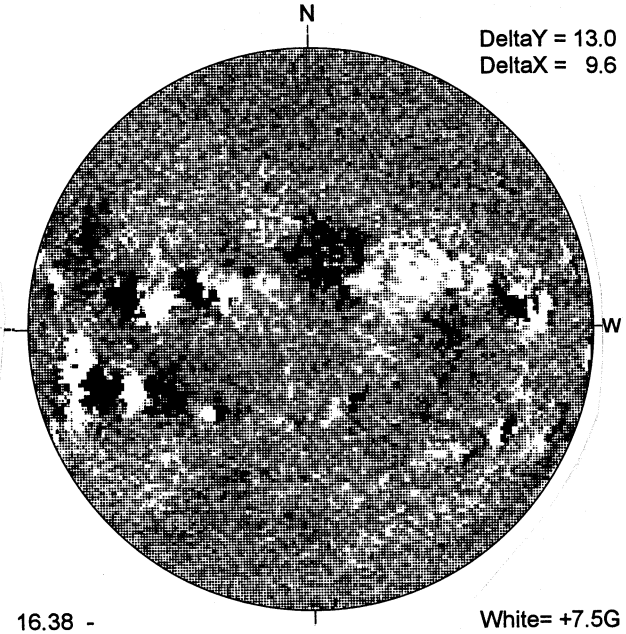

16.38 -
17.31 UT

White= +7.5G
Black = -7.5G

MEUDON H-ALPHA

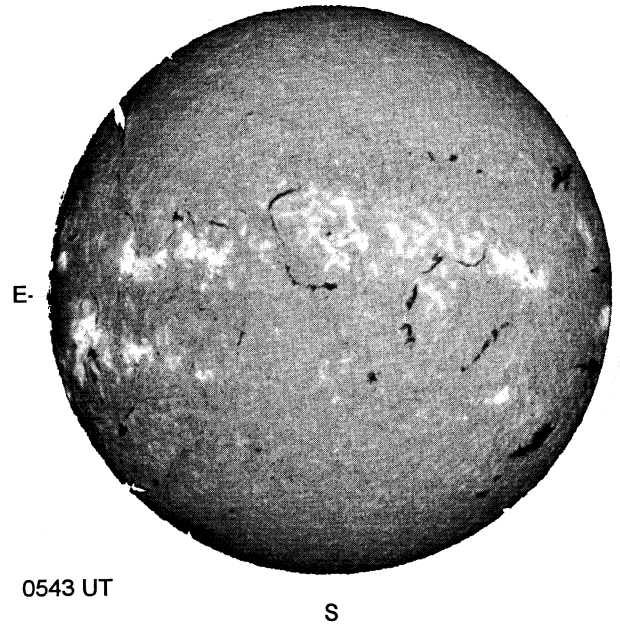

0543 UT

RAMEY SUNSPOT

RAMEY SUNSPOTS
August 13, 2002
15:00 UT Poor
Bp = 6.5
Po = 15.4
Lo = 354.0

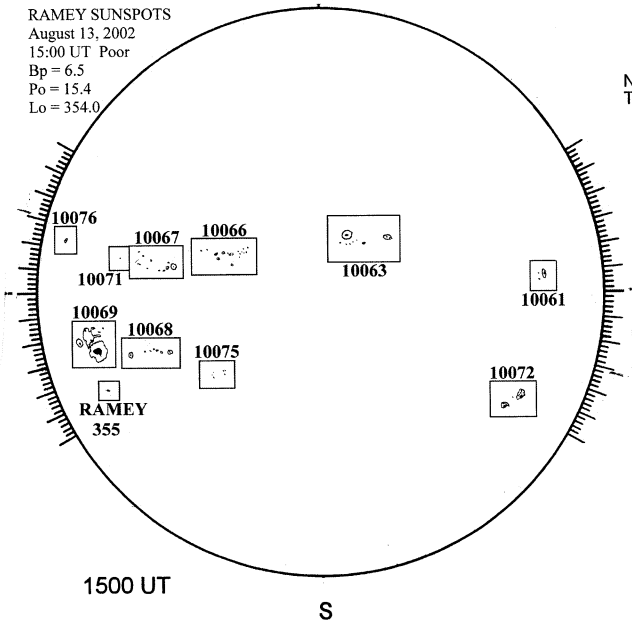

1500 UT

SACRAMENTO PEAK CORONA (1.15 Radii)----

NSO / SACRAMENTO PEAK CORONAL DATA
TICK MARKS EVERY 20 MILLIONTHS

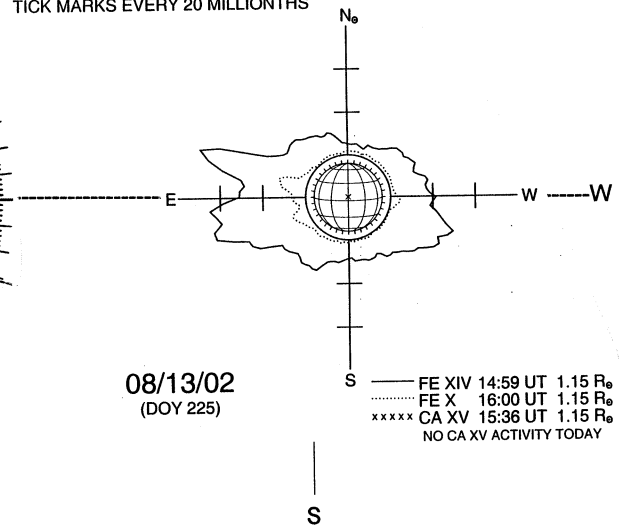

08/13/02
(DOY 225)

FE XIV 14:59 UT 1.15 R⊙
FE X 16:00 UT 1.15 R⊙
CA XV 15:36 UT 1.15 R⊙
NO CA XV ACTIVITY TODAY