AUGUST 12, 2002 (P= 14.89, Bo = 6.48 Lo = 15.32)

KITT PEAK MAGNETOGRAM

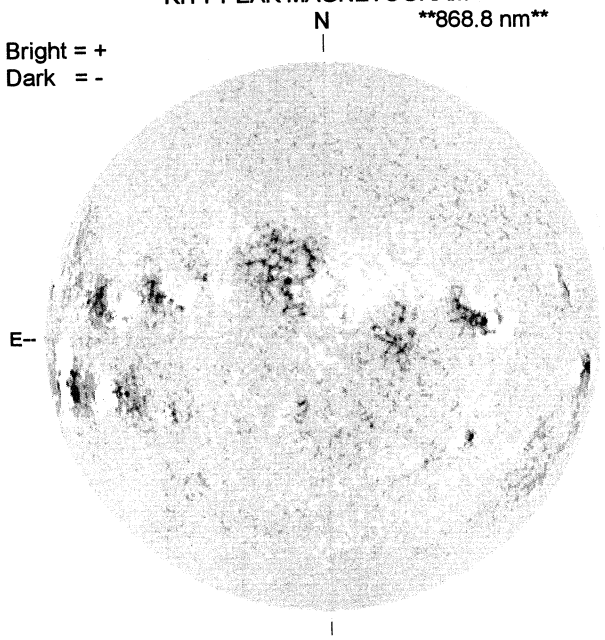

1519 UT

STANFORD MAGNETOGRAM

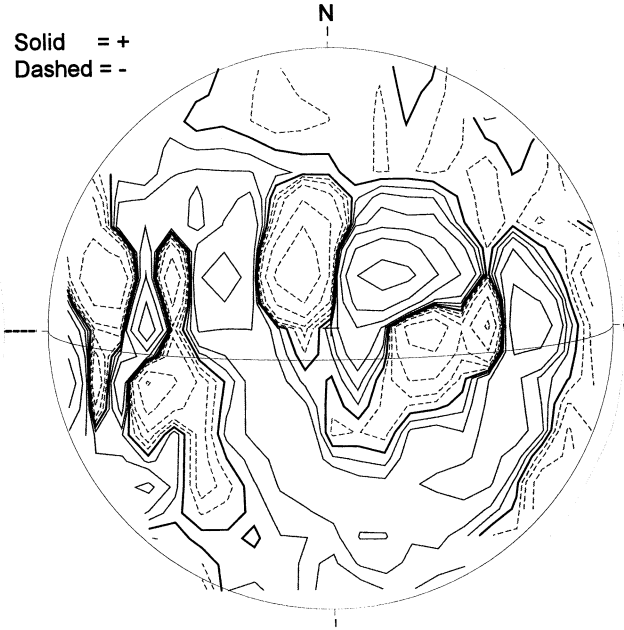

2257 UT

MT. WILSON MAGNETOGRAM

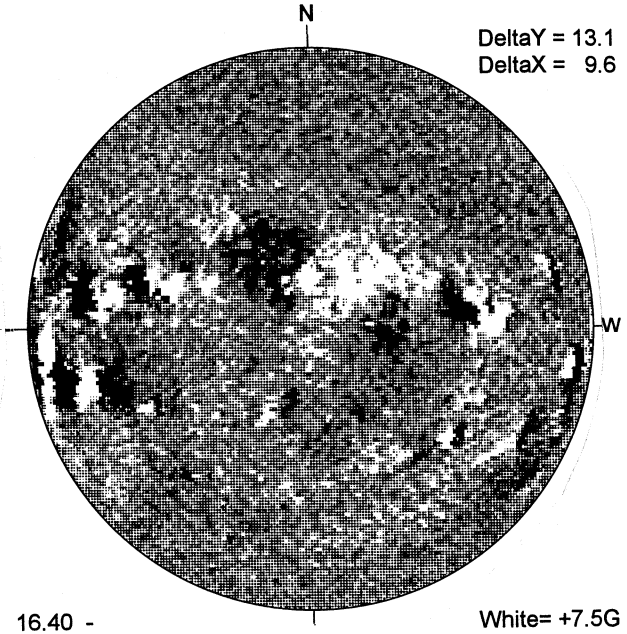

16.40 -
17.33 UT

White= +7.5G
Black = -7.5G

BIG BEAR H-ALPHA

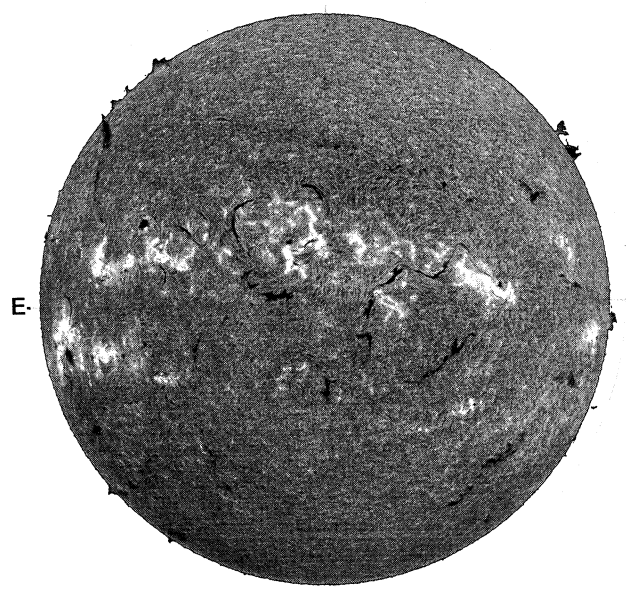

1543 UT

S

RAMEY SUNSPOTS

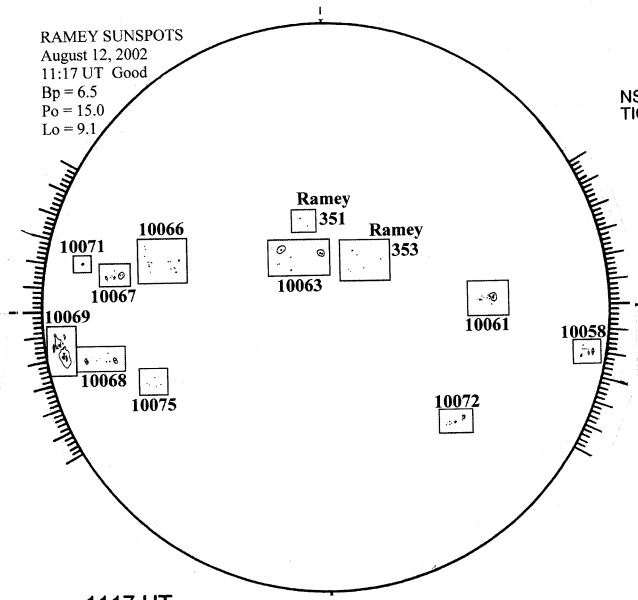

1117 UT

S

SACRAMENTO PEAK CORONA (1.15 Radii)----

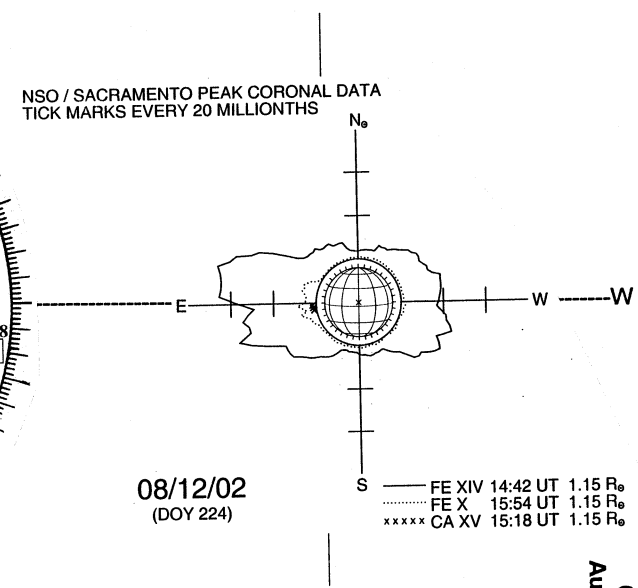

08/12/02
(DOY 224)

S