JULY 31, 2002 (P= 10.33, Bo = 5.70, Lo = 173.99)

KITT PEAK MAGNETOGRAM

868.8 nm

Bright = +
Dark = -

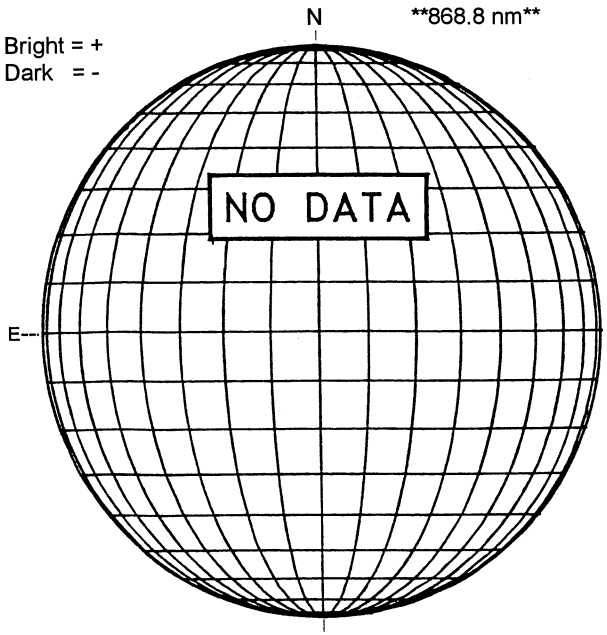

STANFORD MAGNETOGRAM

Solid = +
Dashed = -

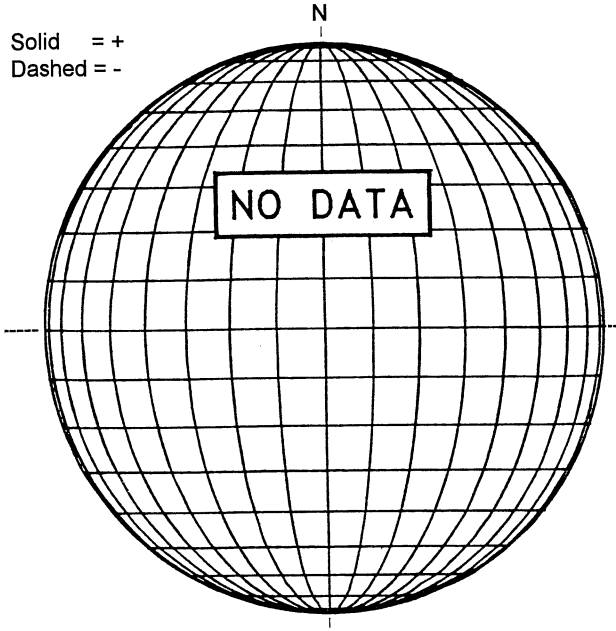

MT. WILSON MAGNETOGRAM

DeltaY = 13.1
DeltaX = 9.6

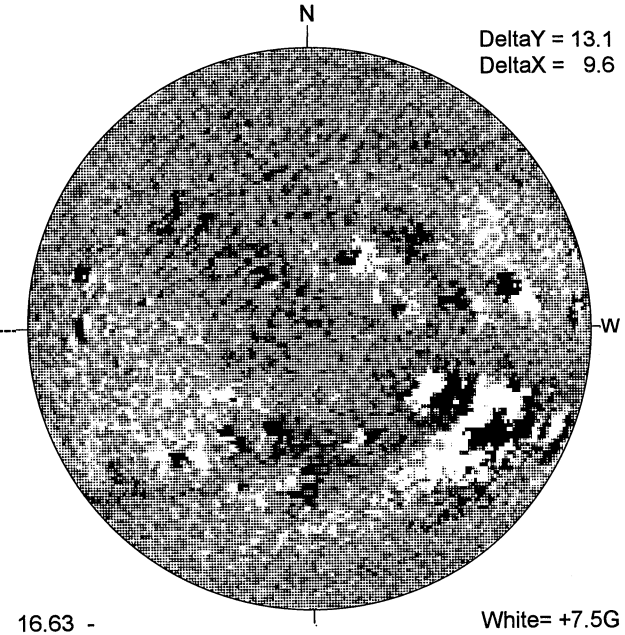

16.63 -
17.55 UT

White= +7.5G
Black = -7.5G

MEUDON H-ALPHA

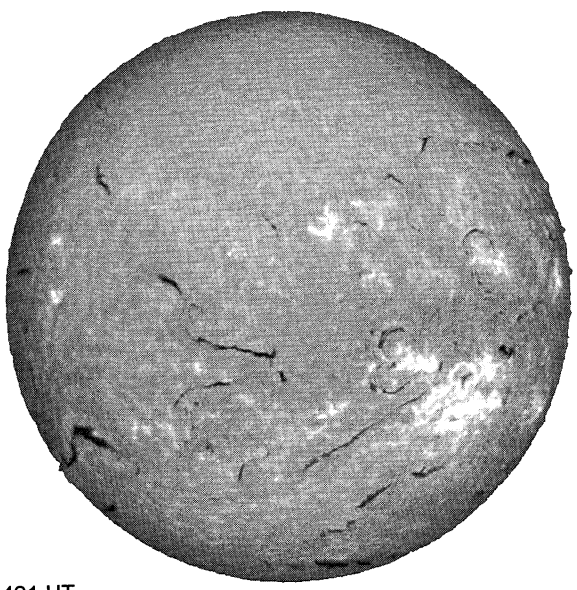

1401 UT

S

HOLLOMAN SUNSPOT

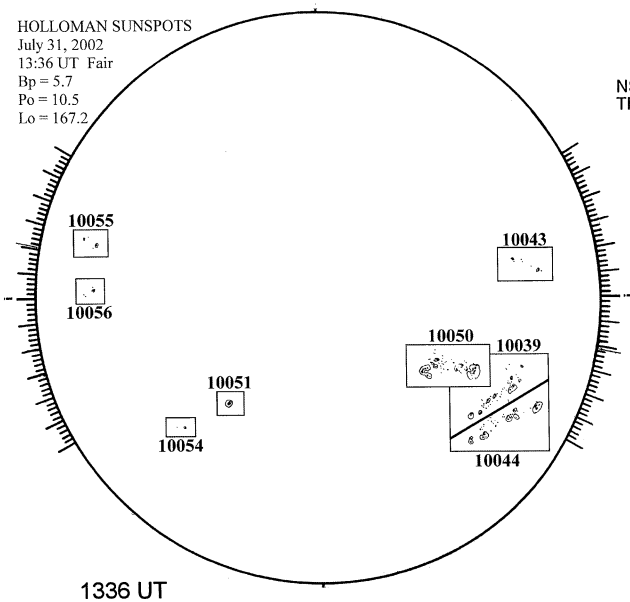

1336 UT

S

SACRAMENTO PEAK CORONA (1.15 Radii)

NSO / SACRAMENTO PEAK CORONAL DATA
TICK MARKS EVERY 20 MILLIONTHS

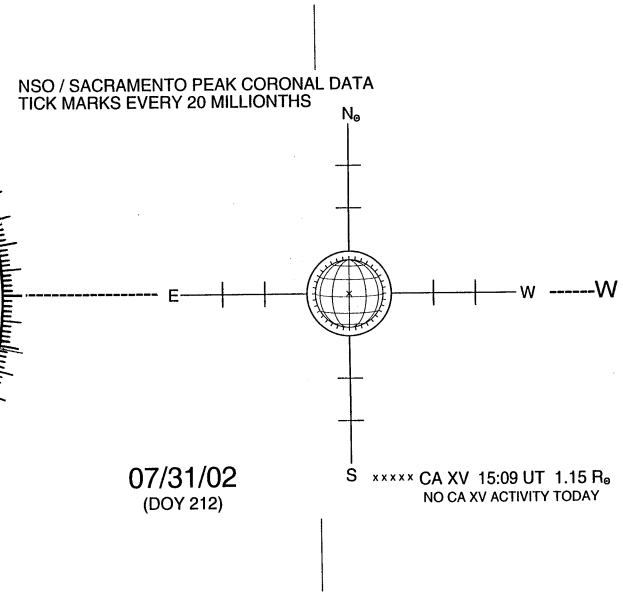

07/31/02
(DOY 212)

xxxxx CA XV 15:09 UT 1.15 $R_\odot$
NO CA XV ACTIVITY TODAY

S