JULY 29, 2002 (P= 9.52 Bo = 5.54, Lo = 200.45)

KITT PEAK MAGNETOGRAM

868.8 nm

Bright = +
Dark = -

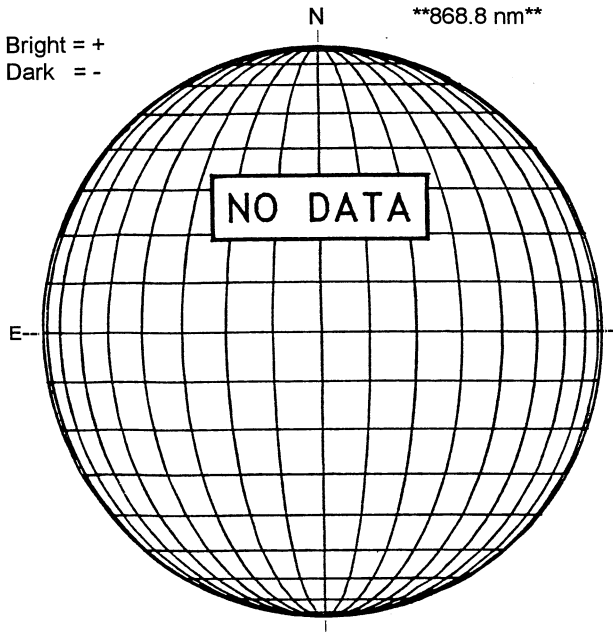

STANFORD MAGNETOGRAM

Solid = +
Dashed = -

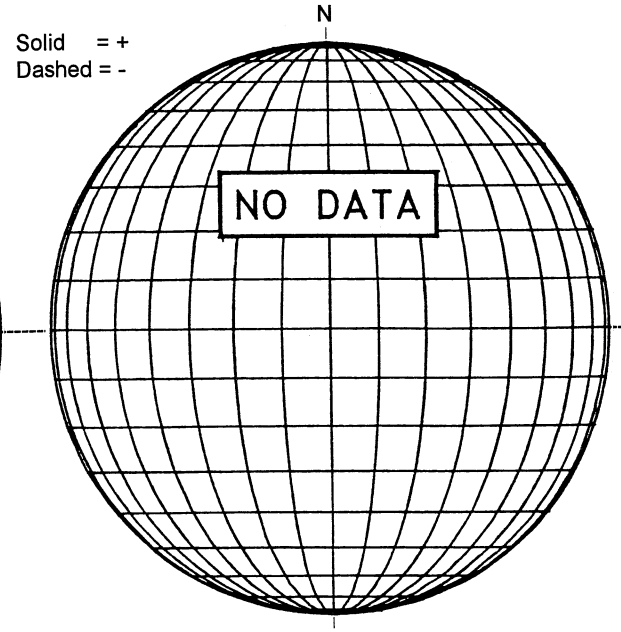

MT. WILSON MAGNETOGRAM

DeltaY = 13.1
DeltaX = 9.6

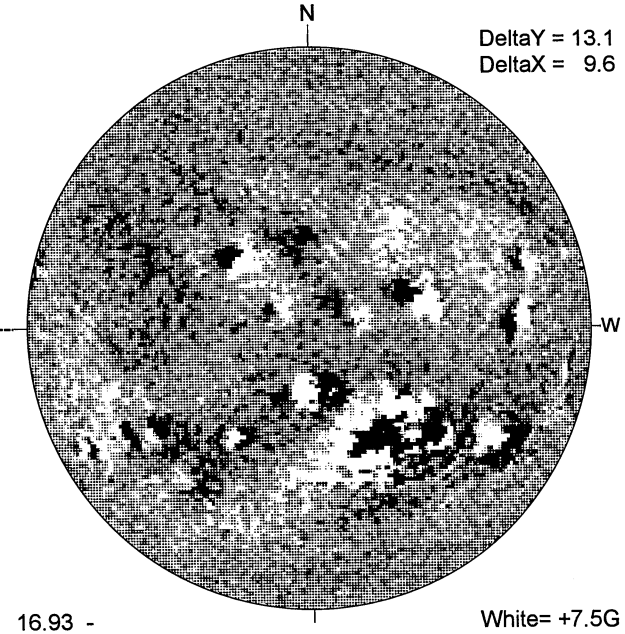

16.93 -
17.85 UT

White= +7.5G
Black = -7.5G

MEUDON H-ALPHA

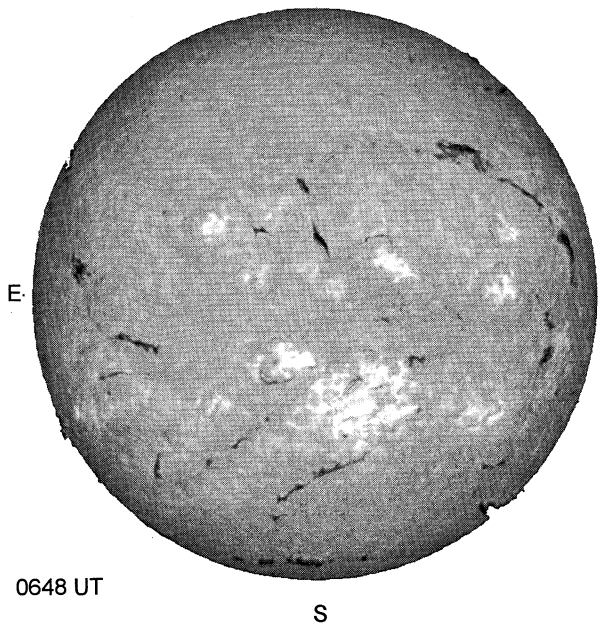

0648 UT

S

HOLLOMAN SUNSPOT

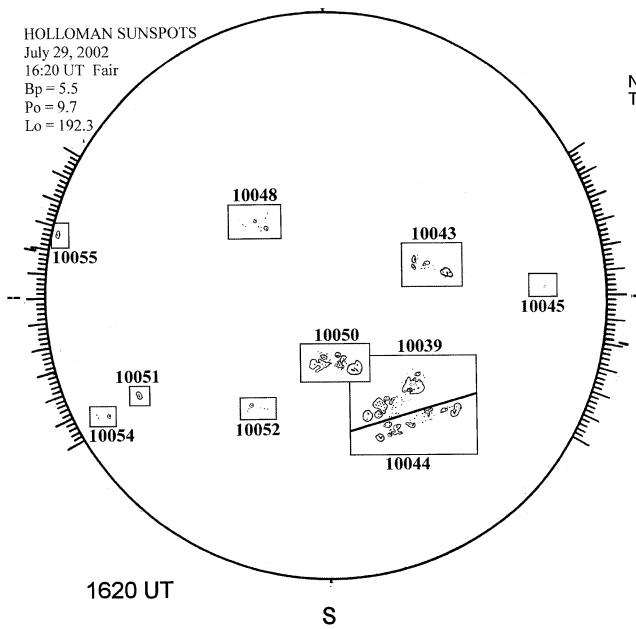

1620 UT

S

SACRAMENTO PEAK CORONA (1.15 Radii)----

NSO / SACRAMENTO PEAK CORONAL DATA
TICK MARKS EVERY 20 MILLIONTHS

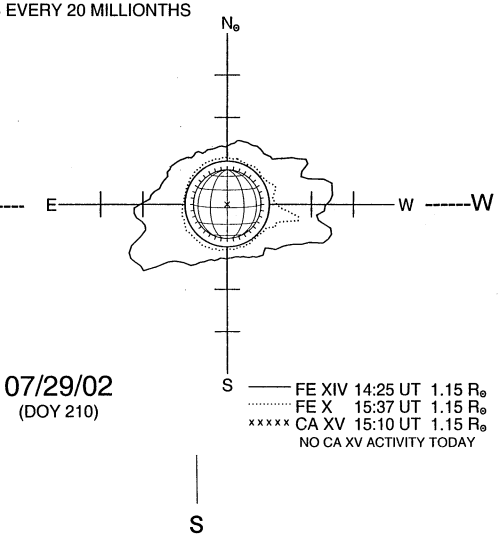

07/29/02
(DOY 210)

S