JULY 11, 2002 (P= 1.74, Bo = 3.92, Lo = 78.60)

KITT PEAK MAGNETOGRAM

N **868.8 nm**

Bright = +
Dark = -

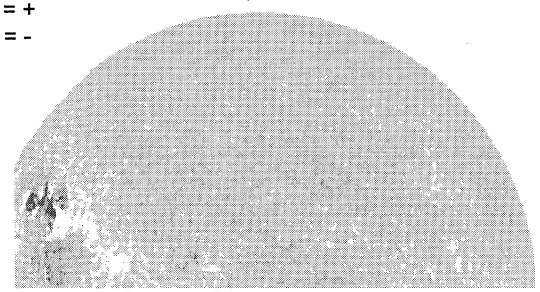

E----

1552 UT

STANFORD MAGNETOGRAM

N

Solid = +
Dashed = -

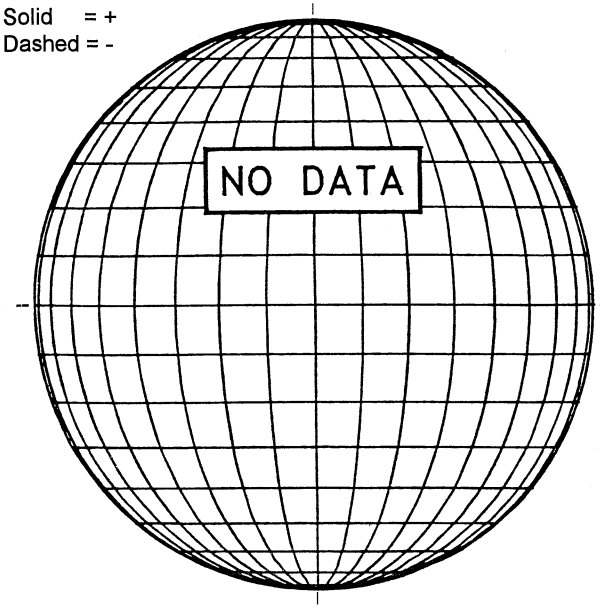

MT. WILSON MAGNETOGRAM

N

DeltaY =
DeltaX =

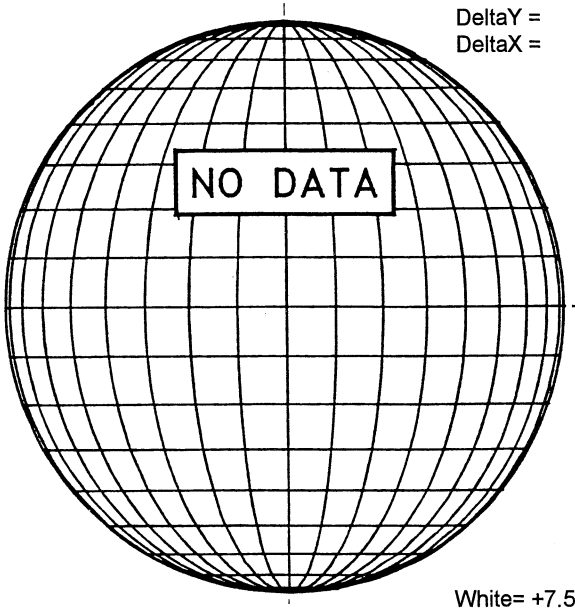

-W

White= +7.5G
Black = -7.5G

MEUDON H-ALPHA

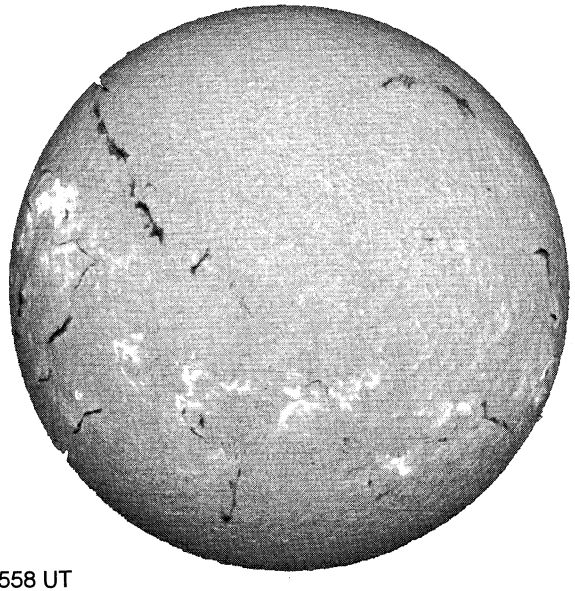

E-

0558 UT

S

RAMEY SUNSPOTS

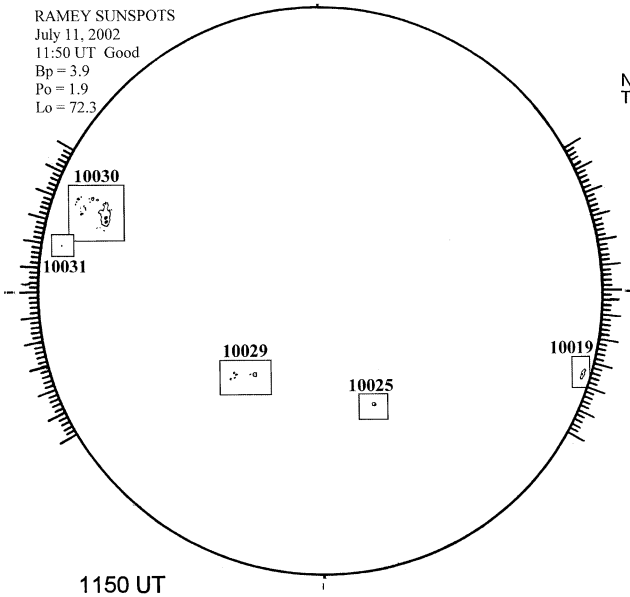

1150 UT

S

SACRAMENTO PEAK CORONA (1.15 Radii)----

NSO / SACRAMENTO PEAK CORONAL DATA
TICK MARKS EVERY 20 MILLIONTHS

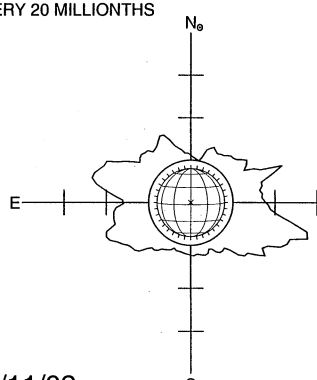

-------W

07/11/02
(DOY 192)

FE XIV 15:06 UT 1.15 R⊙

S