JUNE 27, 2002 (P= - 4.60, Bo = 2.40, Lo = 263.90)

KITT PEAK MAGNETOGRAM

868.8 nm

Bright = +
Dark = -

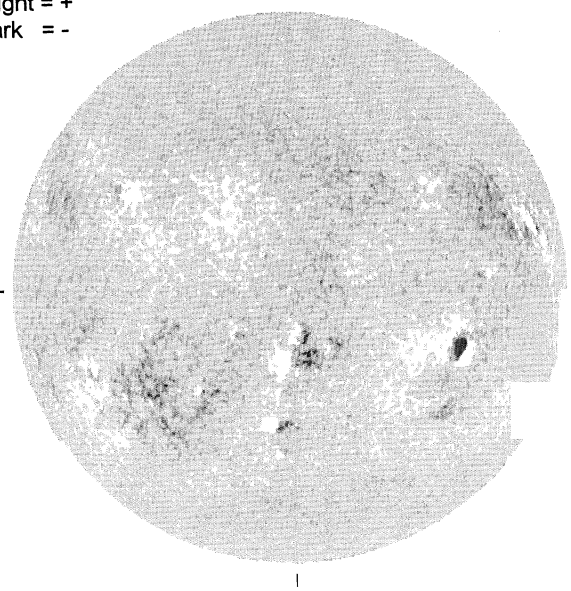

1600 UT

STANFORD MAGNETOGRAM

Solid = +
Dashed = -

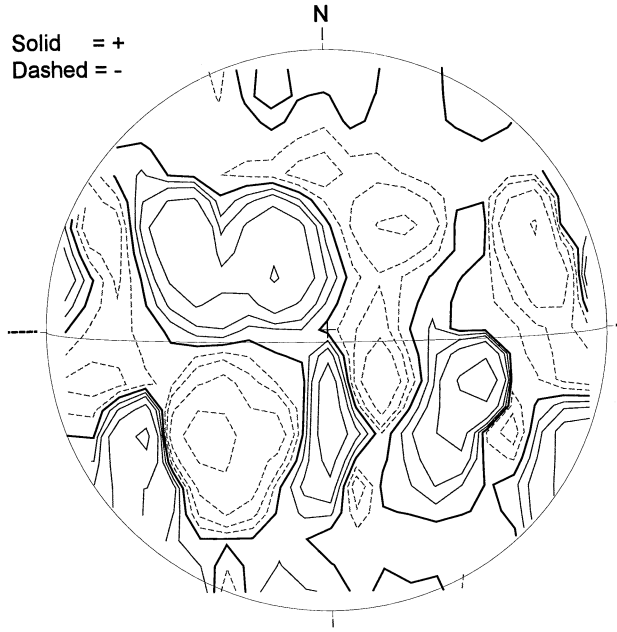

2242 UT

MT. WILSON MAGNETOGRAM

DeltaY = 13.1
DeltaX = 9.6

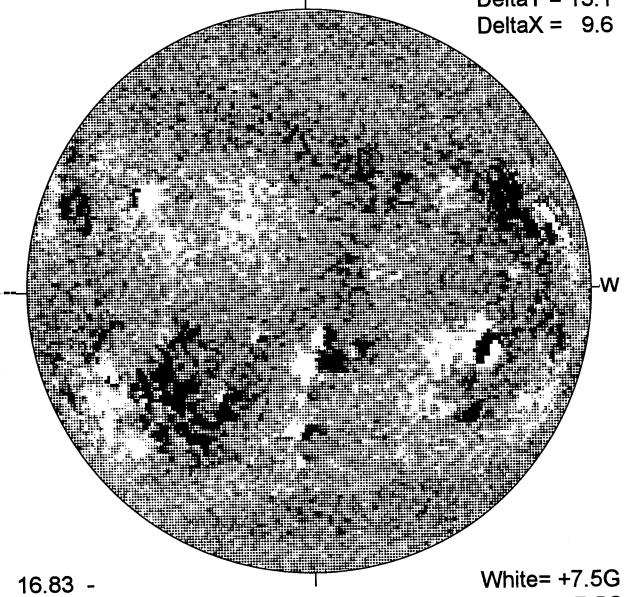

16.83 -
17.75 UT

White= +7.5G
Black = -7.5G

MEUDON H-ALPHA

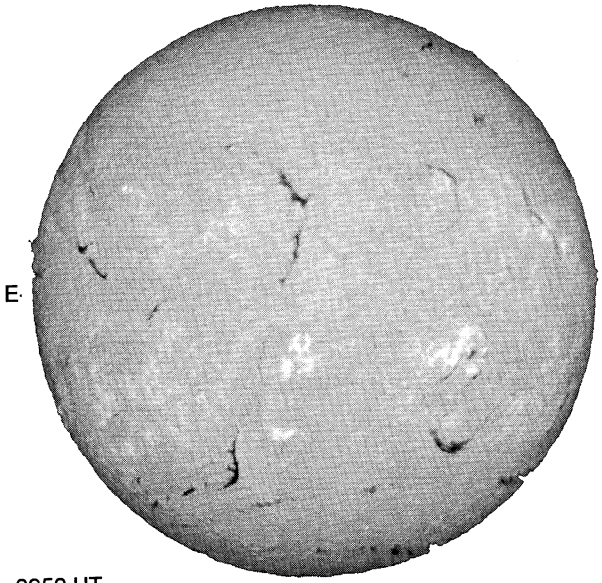

0950 UT

S

RAMEY SUNSPOT

RAMEY SUNSPOTS
June 27, 2002
12:25 UT Fair
Bp = 2.4
Po = -4.3
Lo = 257.2

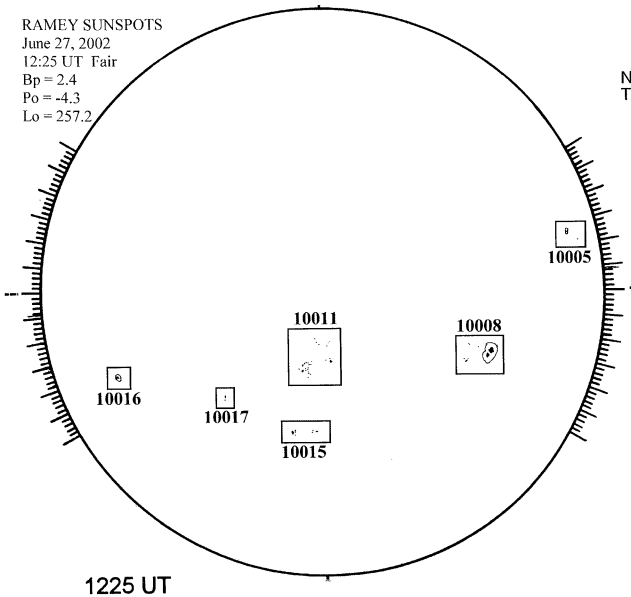

1225 UT

S

SACRAMENTO PEAK CORONA (1.15 Radii)

NSO / SACRAMENTO PEAK CORONAL DATA
TICK MARKS EVERY 20 MILLIONTHS

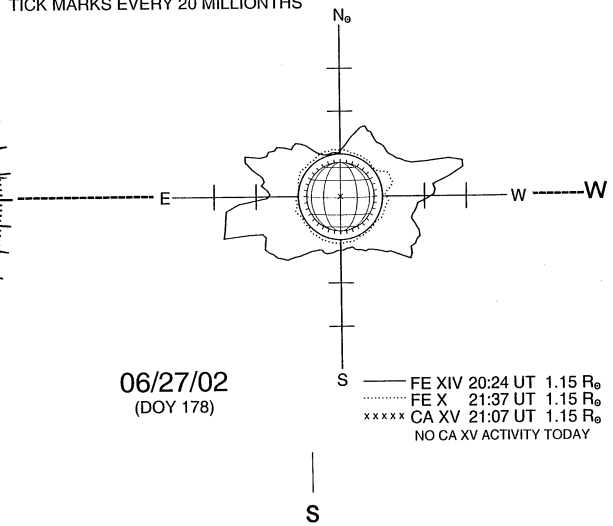

06/27/02
(DOY 178)

FE XIV 20:24 UT 1.15 R⊙
FE X 21:37 UT 1.15 R⊙
CA XV 21:07 UT 1.15 R⊙
NO CA XV ACTIVITY TODAY

S