JUNE 18, 2002 (P= - 8.59, Bo = 1.36, Lo = 23.04)

KITT PEAK MAGNETOGRAM

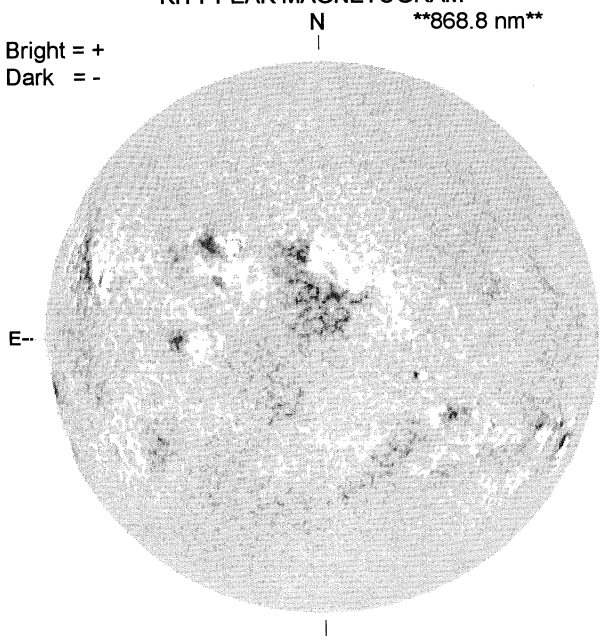

1622 UT

STANFORD MAGNETOGRAM

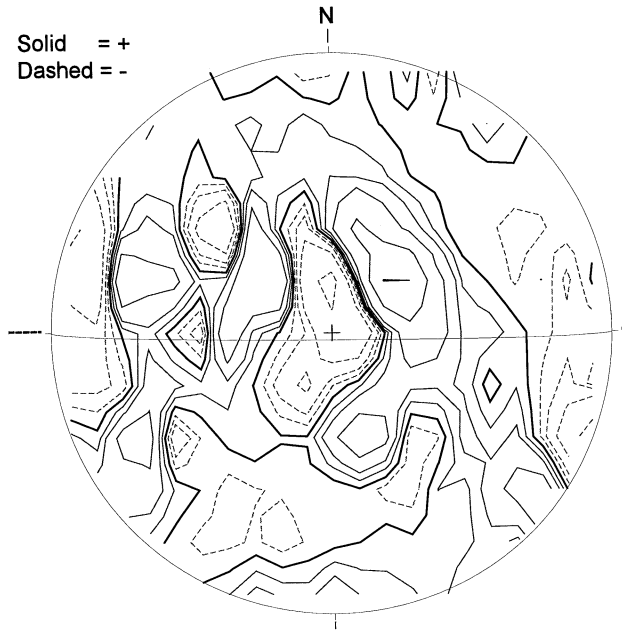

2055 UT

MT. WILSON MAGNETOGRAM

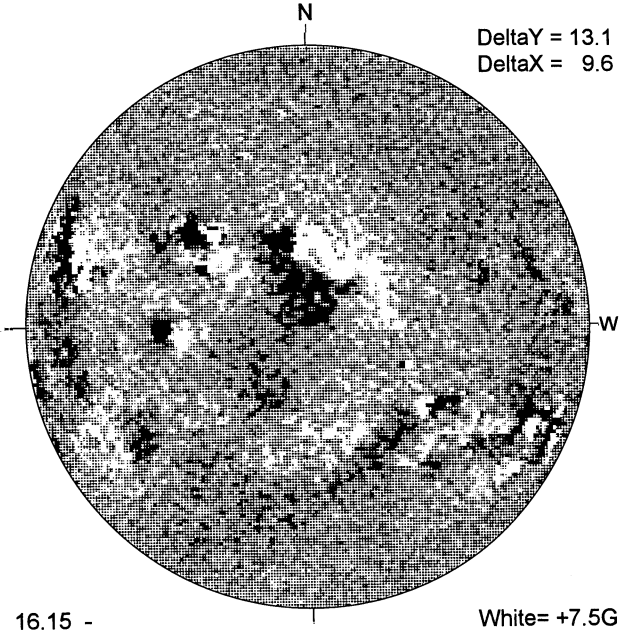

16.15 -
17.07 UT

MEUDON H-ALPHA

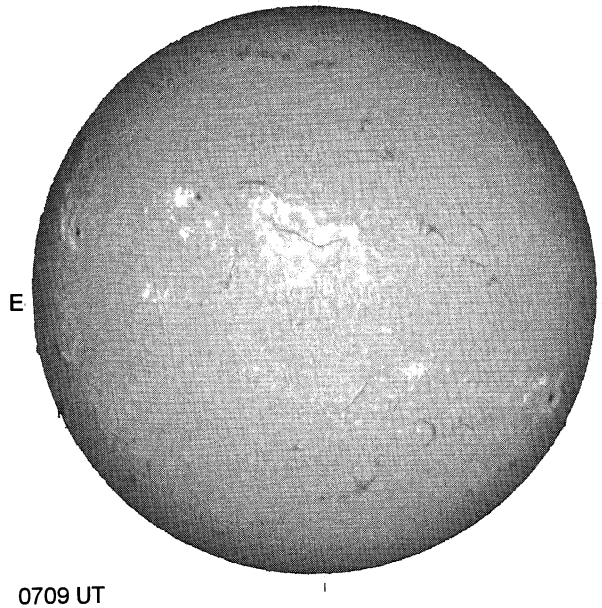

0709 UT

S

RAMEY SUNSPOT

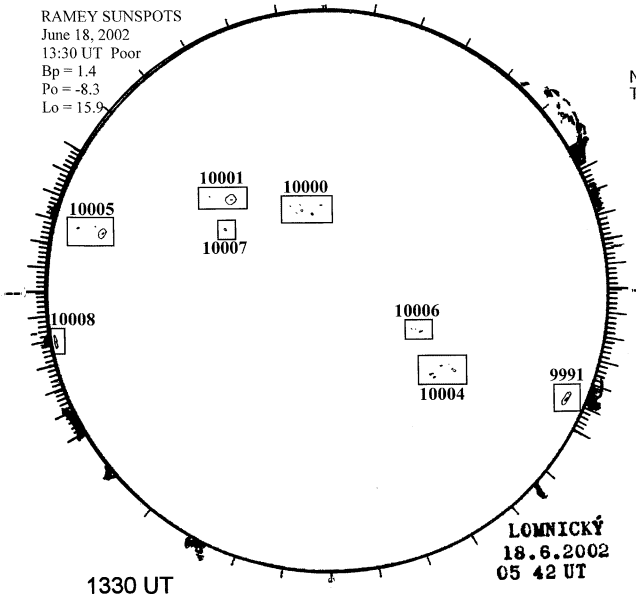

1330 UT
0542 UT LOMN Prom S

SACRAMENTO PEAK CORONA (1.15 Radii)----

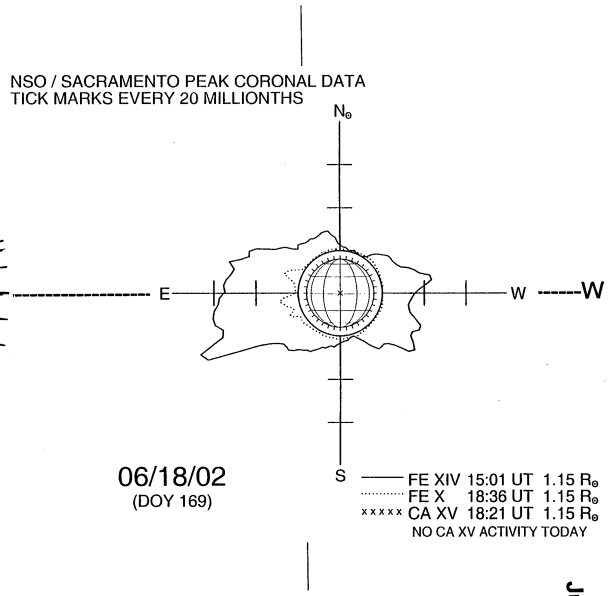

06/18/02
(DOY 169)

S