JUNE 10, 2002 (P= -11.99, Bo = 0.40 Lo = 128.92)

KITT PEAK MAGNETOGRAM

868.8 nm

Bright = +
Dark = -

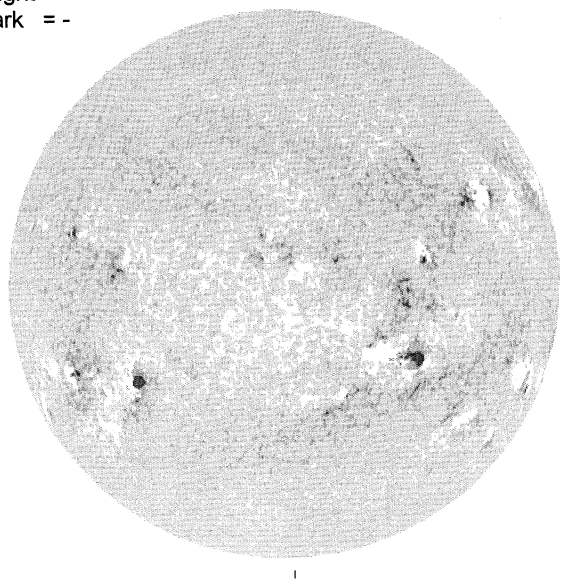

1510 UT

STANFORD MAGNETOGRAM

Solid = +
Dashed = -

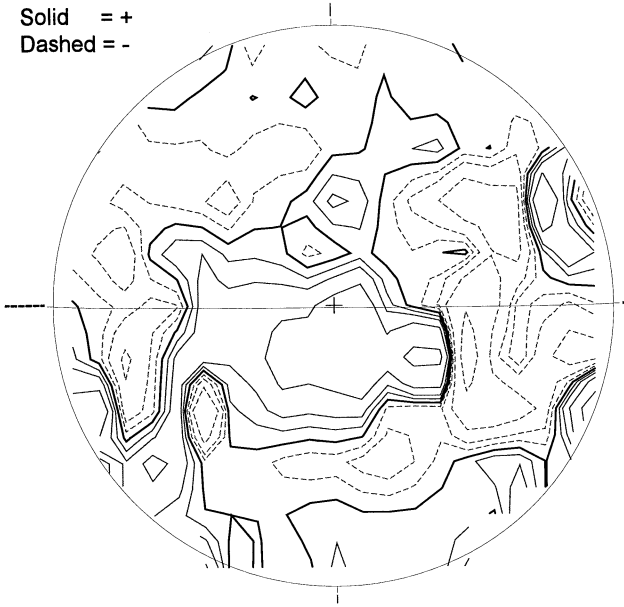

1752 UT

MT. WILSON MAGNETOGRAM

DeltaY = 13.1
DeltaX = 9.6

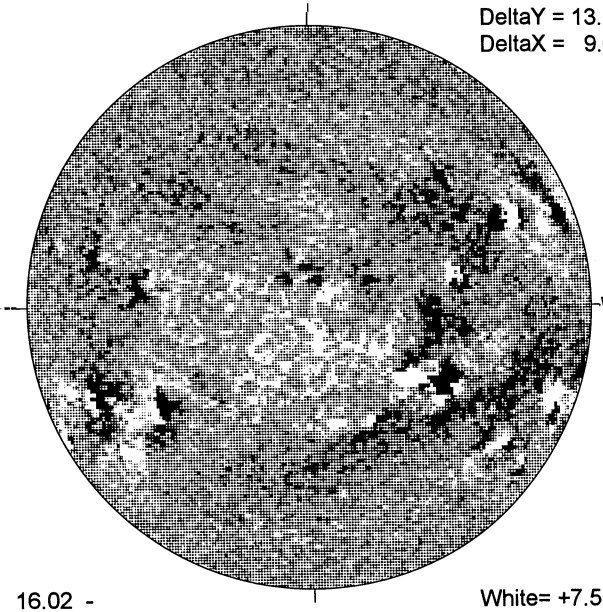

16.02 -
16.93 UT

White= +7.5G
Black = -7.5G

MEUDON H-ALPHA

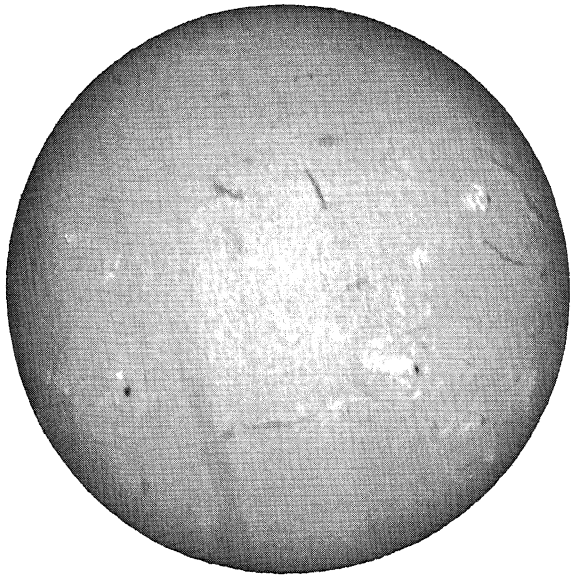

1130 UT

RAMEY SUNSPOTS

RAMEY SUNSPOTS
June 10, 2002
14:20 UT Fair
Bp = 0.4
Po = -11.7
Lo = 122.4

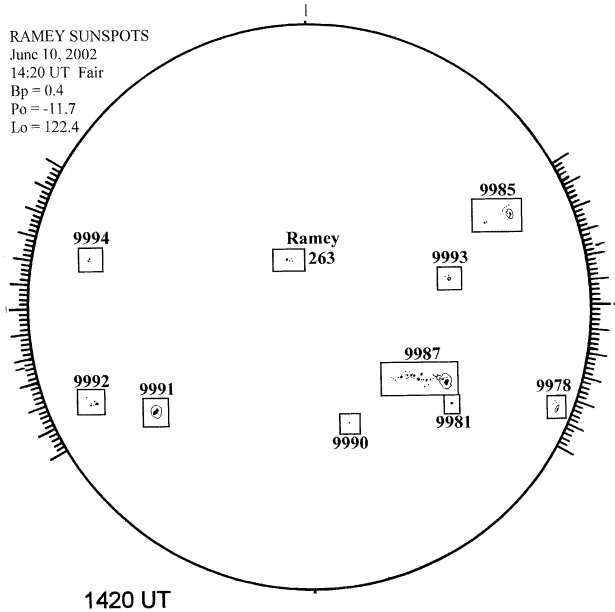

1420 UT

SACRAMENTO PEAK CORONA (1.15 Radii)

NSO / SACRAMENTO PEAK CORONAL DATA
TICK MARKS EVERY 20 MILLIONTHS

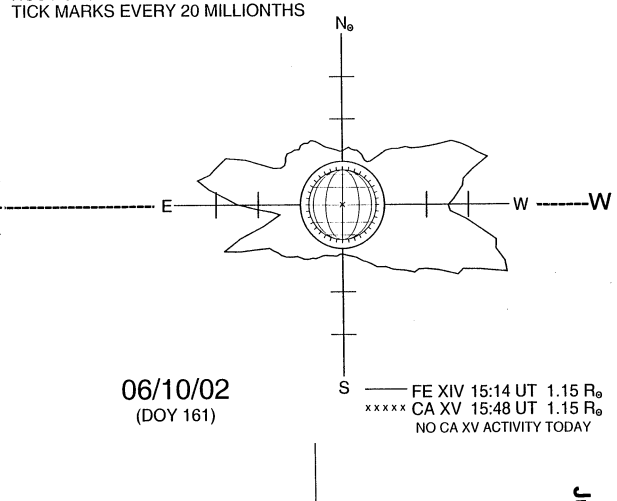

06/10/02
(DOY 161)

FE XIV 15:14 UT 1.15 R⊙
xxxxx CA XV 15:48 UT 1.15 R⊙
NO CA XV ACTIVITY TODAY