JUNE 9, 2002 (P= -12.39, Bo = 0.28, Lo = 142.16)

KITT PEAK MAGNETOGRAM

N

**868.8 nm

Bright = +
Dark = -

E-

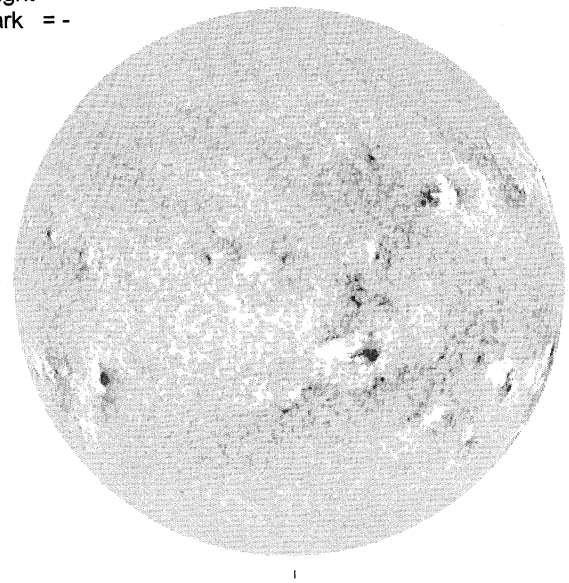

1816 UT

STANFORD MAGNETOGRAM

N

Solid = +
Dashed = -

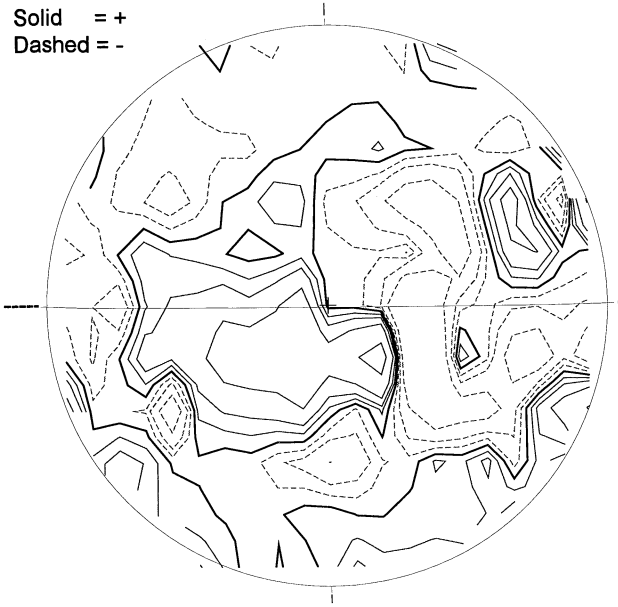

2219 UT

MT. WILSON MAGNETOGRAM

N

DeltaY = 13.1
DeltaX = 9.6

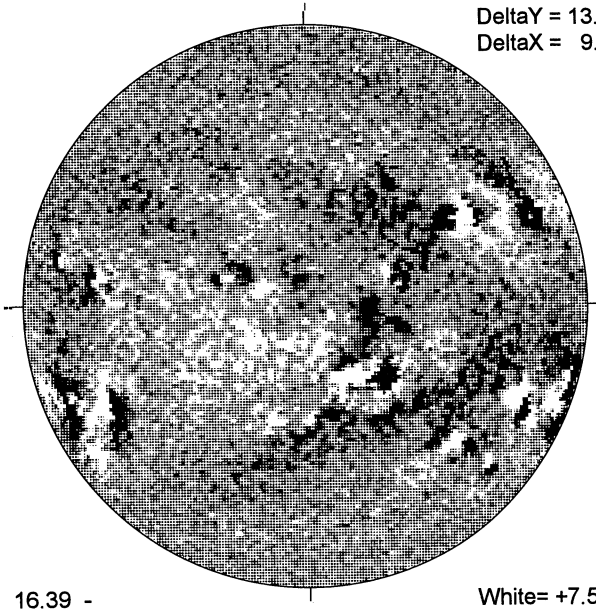

-W

16.39 -
17.31 UT

White= +7.5G
Black = -7.5G

MEUDON H-ALPHA

E-

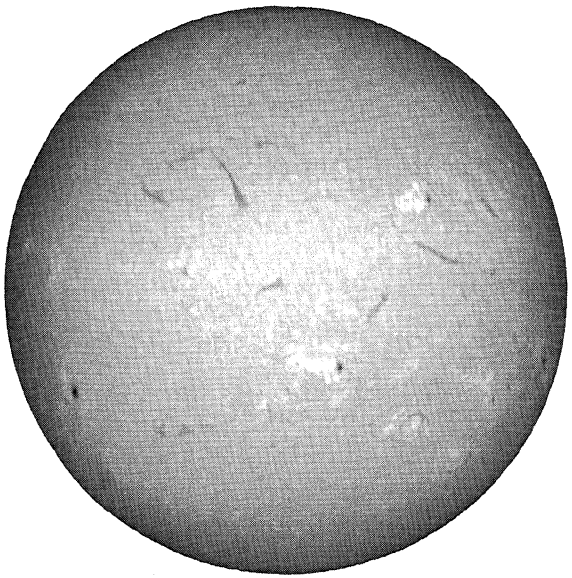

0610 UT

S

RAMEY SUNSPOT

RAMEY SUNSPOTS
June 09, 2002
16:02 UT V. Poor
Bp = 0.3
Po = -12.1
Lo = 133.4

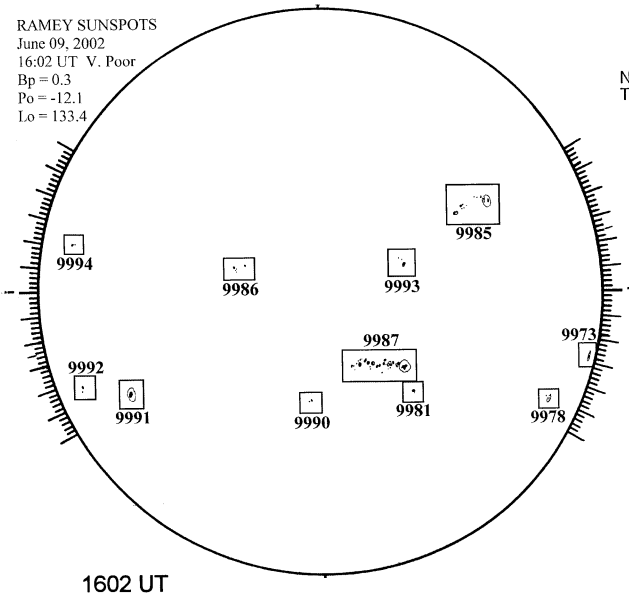

1602 UT

S

SACRAMENTO PEAK CORONA (1.15 Radii)

NSO / SACRAMENTO PEAK CORONAL DATA
TICK MARKS EVERY 20 MILLIONTHS

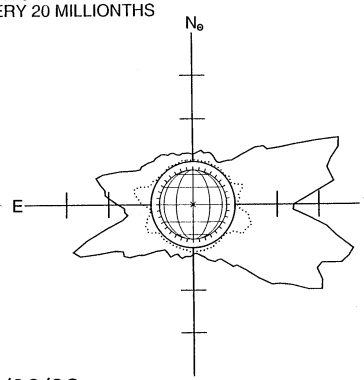

-W

06/09/02
(DOY 160)

FE XIV 14:53 UT 1.15 R⊙
FE X 15:29 UT 1.15 R⊙
xxxxx CA XV 16:43 UT 1.15 R⊙
NO CA XV ACTIVITY TODAY

S