JUNE 5, 2002 (P= -13.99, Bo = -0.20, Lo = 195.10)

KITT PEAK MAGNETOGRAM

868.8 nm

Bright = +
Dark = -

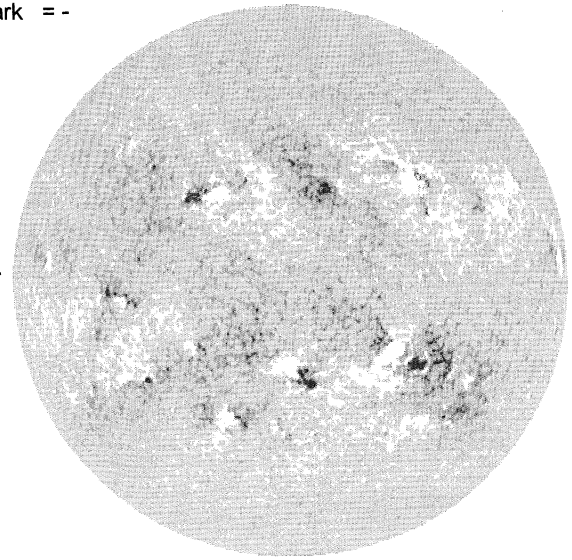

1542 UT

STANFORD MAGNETOGRAM

Solid = +
Dashed = -

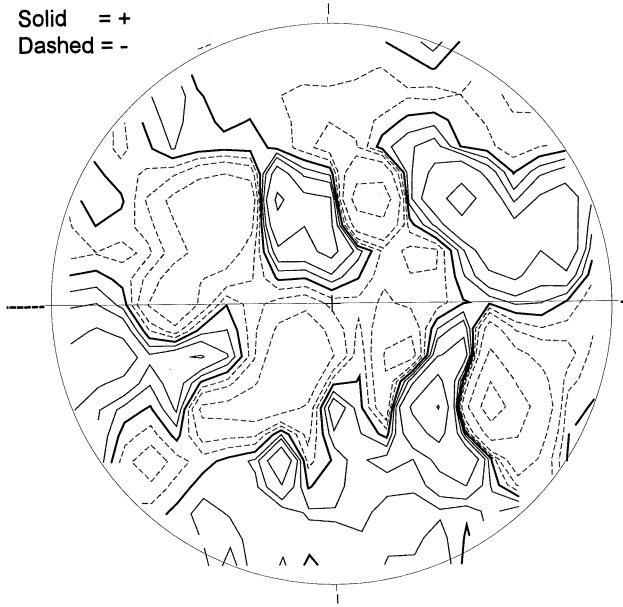

2218 UT

MT. WILSON MAGNETOGRAM

DeltaY = 13.1
DeltaX = 9.6

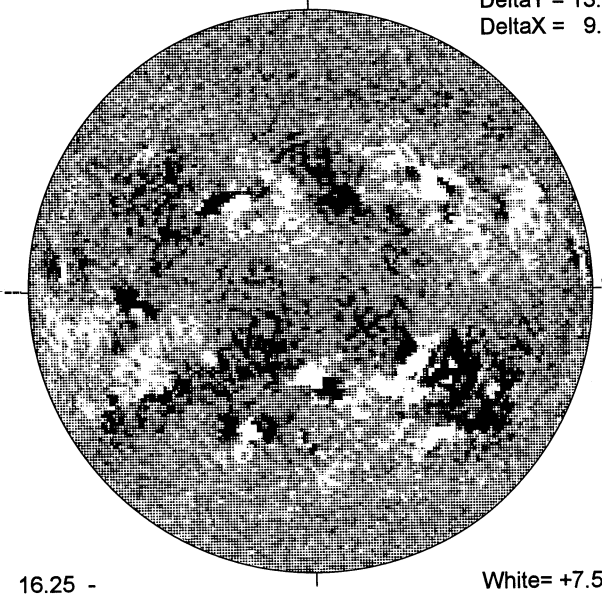

16.25 -
17.17 UT

White= +7.5G
Black = -7.5G

MEUDON H-ALPHA

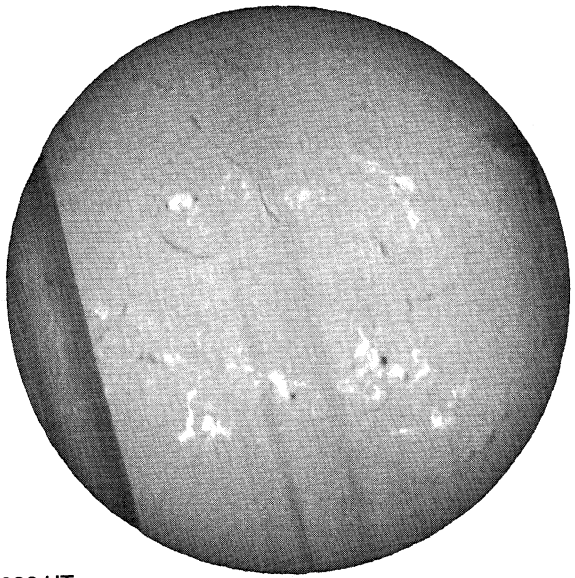

0930 UT

RAMEY SUNSPOT

RAMEY SUNSPOTS
June 05, 2002
13:40 UT Poor
Bp = -0.1
Po = -13.7
Lo = 188.1

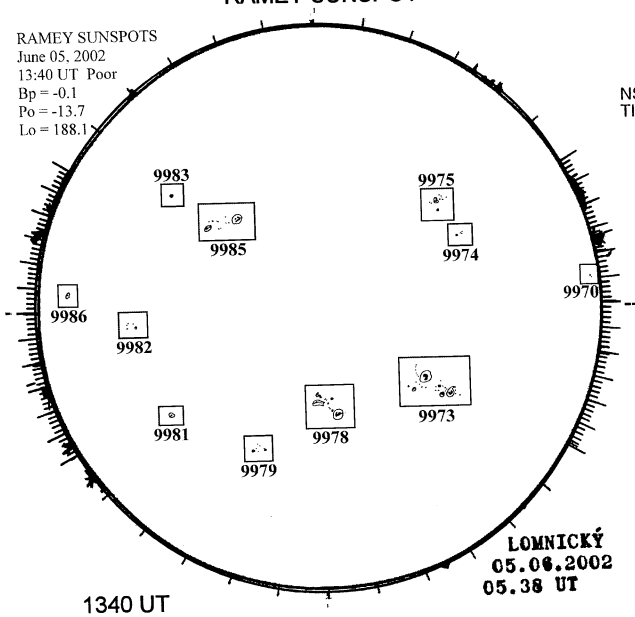

LOMNICKÝ
05.06.2002
05.38 UT

1340 UT
0538 UT LOMN Prom

SACRAMENTO PEAK CORONA (1.15 Radii)

NSO / SACRAMENTO PEAK CORONAL DATA
TICK MARKS EVERY 20 MILLIONTHS

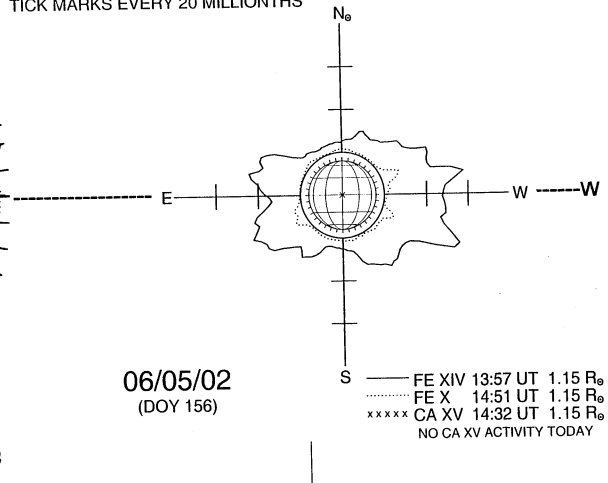

06/05/02
(DOY 156)

FE XIV 13:57 UT 1.15 R⊙
FE X 14:51 UT 1.15 R⊙
CA XV 14:32 UT 1.15 R⊙
NO CA XV ACTIVITY TODAY