MAY 31, 2002 (P= -15.89, Bo = -0.81, Lo = 261.27)

KITT PEAK MAGNETOGRAM

Bright = +
Dark = -

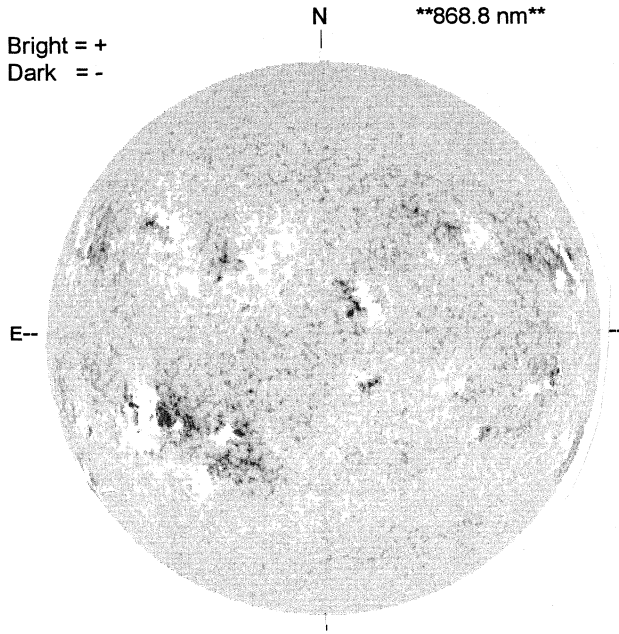

1510 UT

STANFORD MAGNETOGRAM

Solid = +
Dashed = -

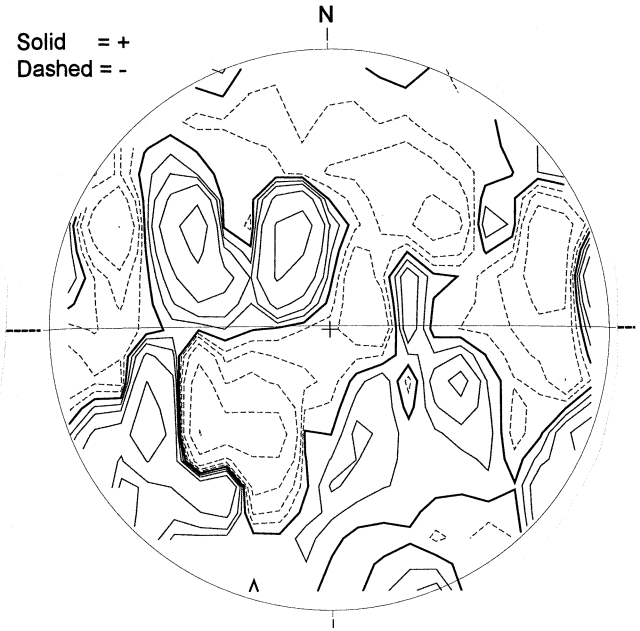

2032 UT

MT. WILSON MAGNETOGRAM

DeltaY =
DeltaX =

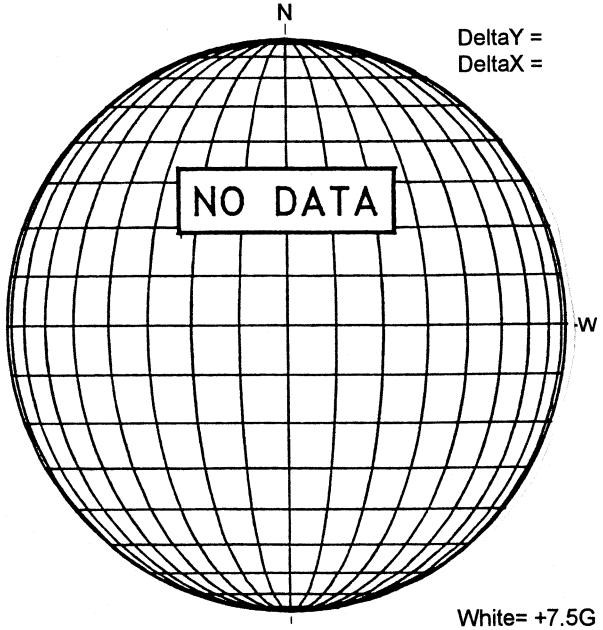

White= +7.5G
Black = -7.5G

MEUDON H-ALPHA

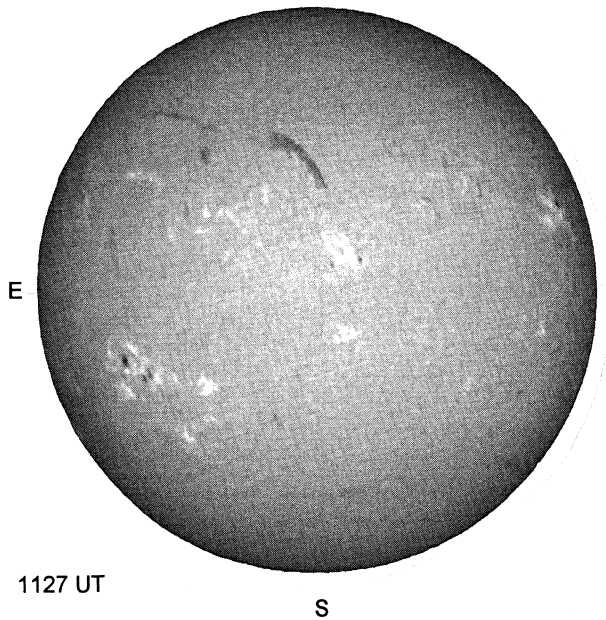

1127 UT

RAMEY SUNSPOT

RAMEY SUNSPOTS
May 31, 2002
13:44 UT Fair
Bp = -0.7
Po = -15.7
Lo = 255.5

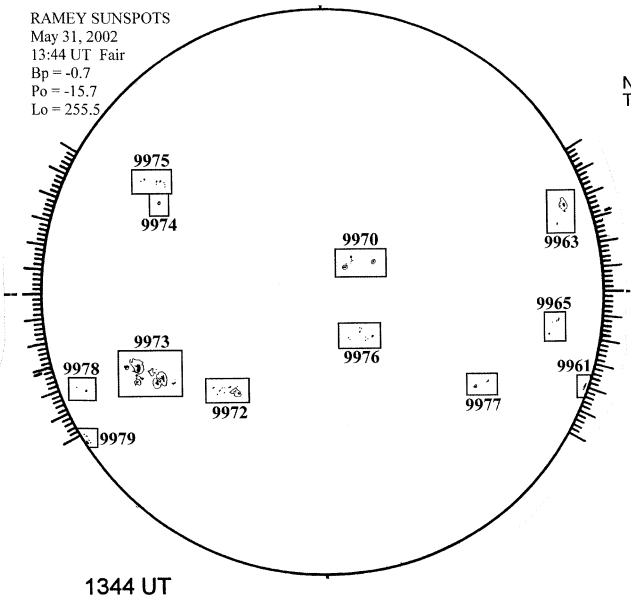

1344 UT

SACRAMENTO PEAK CORONA (1.15 Radii)----

NSO / SACRAMENTO PEAK CORONAL DATA
TICK MARKS EVERY 20 MILLIONTHS

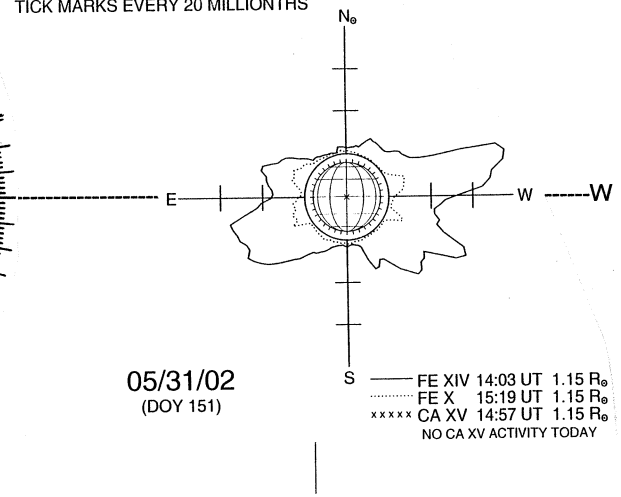

05/31/02
(DOY 151)

FE XIV 14:03 UT 1.15 R⊙
FE X 15:19 UT 1.15 R⊙
xxxxx CA XV 14:57 UT 1.15 R⊙
NO CA XV ACTIVITY TODAY