MAY 29, 2002 (P= -16.61 Bo = -1.05, Lo = 287.73)

KITT PEAK MAGNETOGRAM

868.8 nm

Bright = +
Dark = -

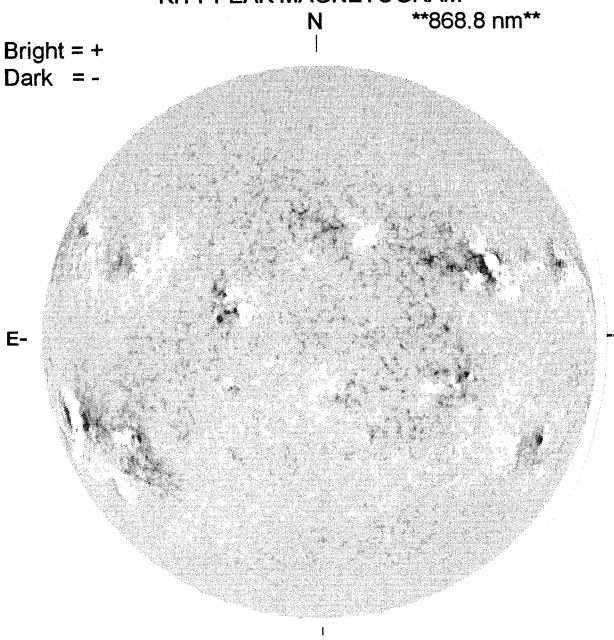

1534 UT

STANFORD MAGNETOGRAM

Solid = +
Dashed = -

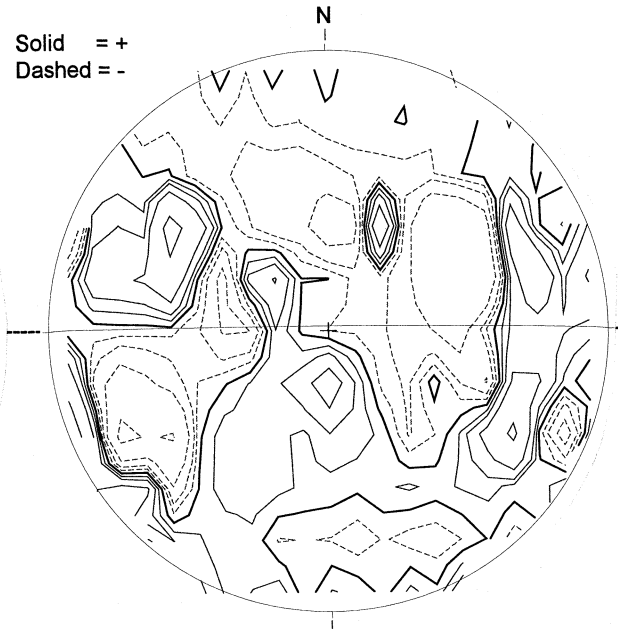

1805 UT

MT. WILSON MAGNETOGRAM

DeltaY = 13.1
DeltaX = 9.6

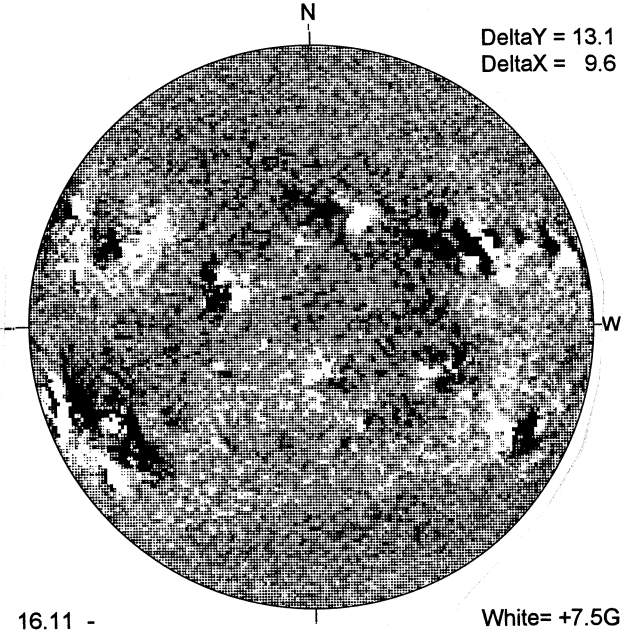

16.11 -
17.04 UT

White= +7.5G
Black = -7.5G

MEUDON H-ALPHA

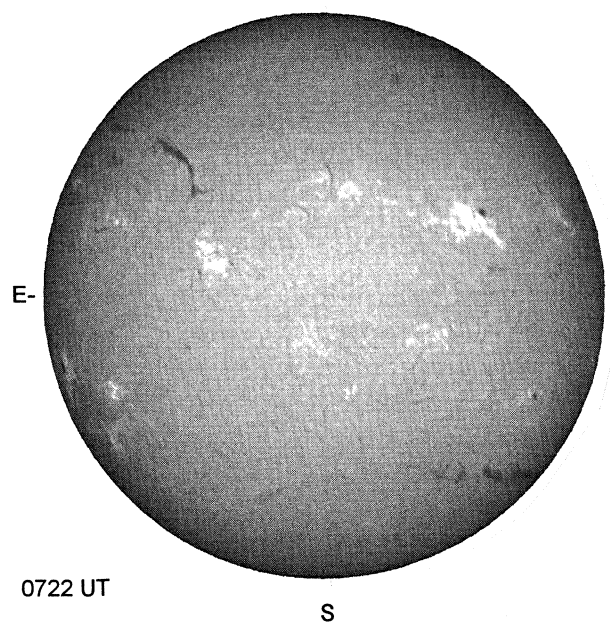

0722 UT

RAMEY SUNSPOT

RAMEY SUNSPOTS
May 29, 2002
14:20 UT Fair
Bp = -0.9
Po = -16.3
Lo = 280.0

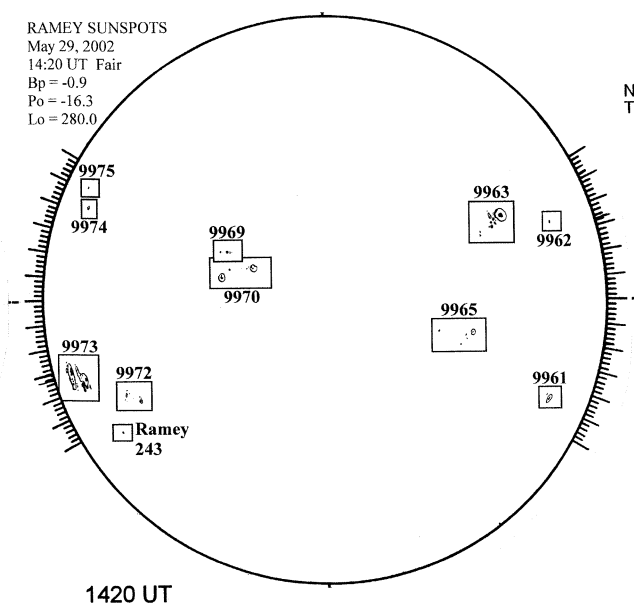

1420 UT

SACRAMENTO PEAK CORONA (1.15 Radii)

NSO / SACRAMENTO PEAK CORONAL DATA
TICK MARKS EVERY 20 MILLIONTHS

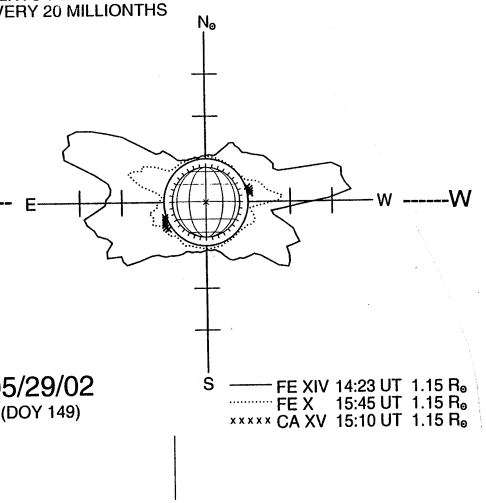

05/29/02
(DOY 149)

FE XIV 14:23 UT 1.15 R⊙
FE X 15:45 UT 1.15 R⊙
xxxxx CA XV 15:10 UT 1.15 R⊙