MAY 28, 2002 (P= -16.96, Bo = -1.17, Lo = 300.97)

KITT PEAK MAGNETOGRAM

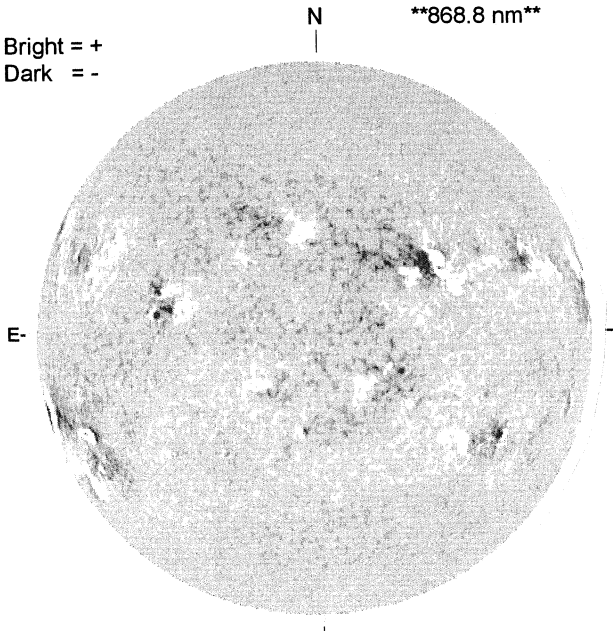

STANFORD MAGNETOGRAM

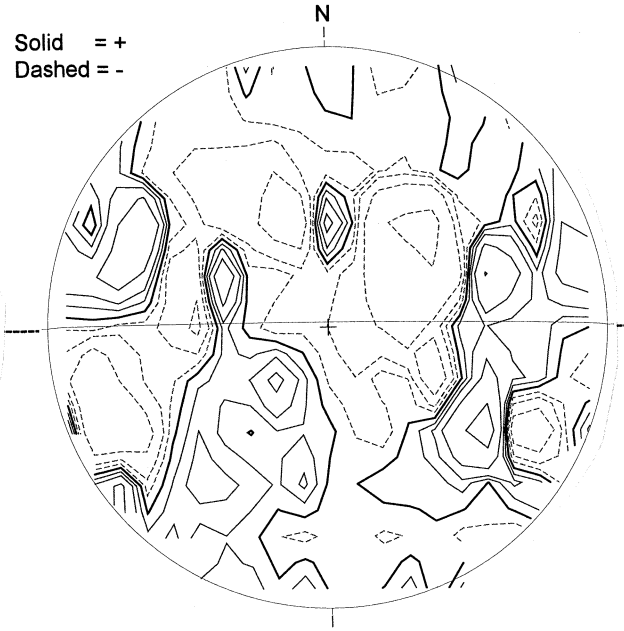

MT. WILSON MAGNETOGRAM

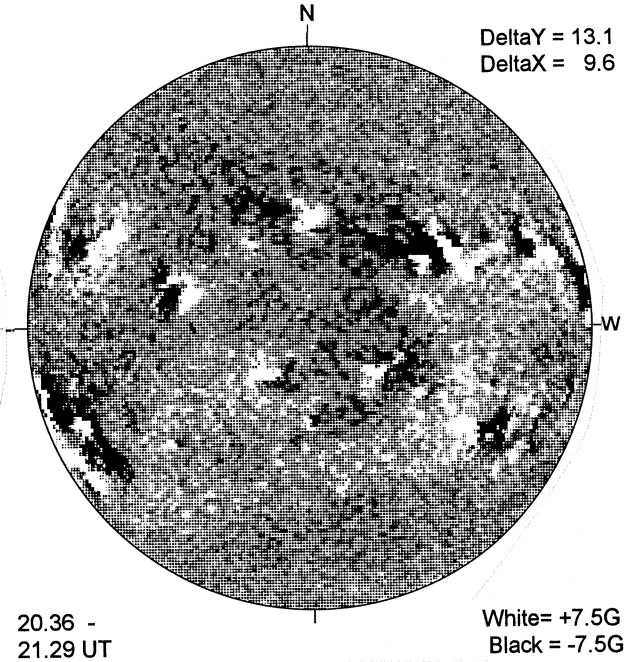

MEUDON H-ALPHA

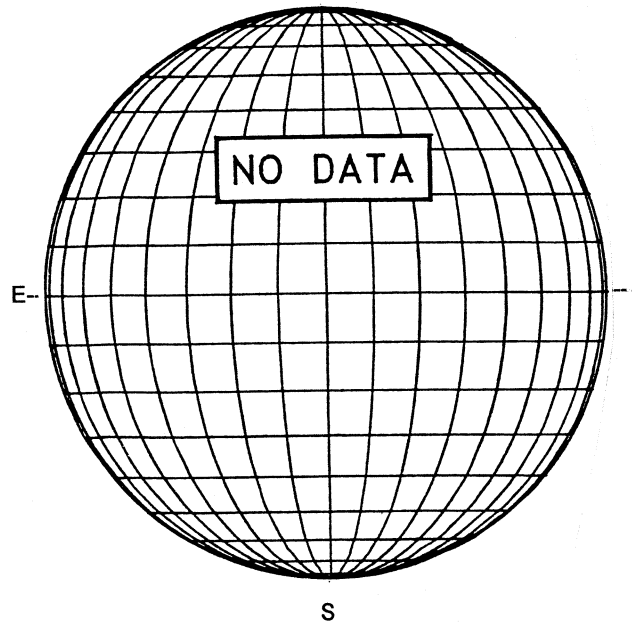

RAMEY SUNSPOT

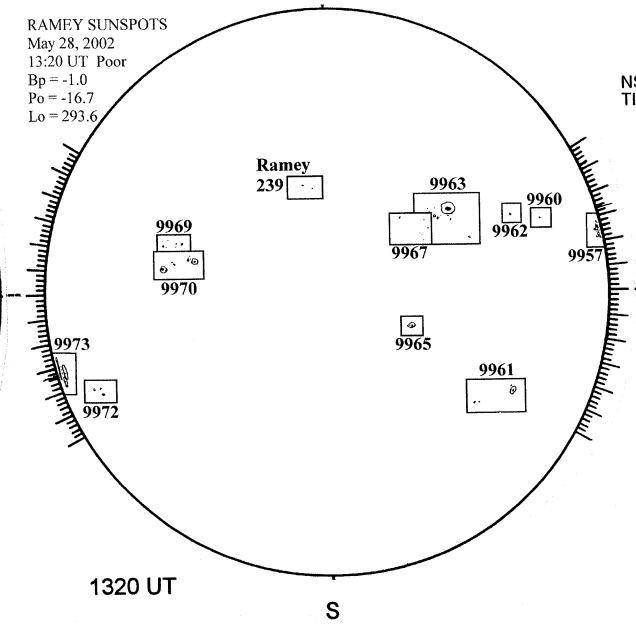

SACRAMENTO PEAK CORONA (1.15 Radii)----

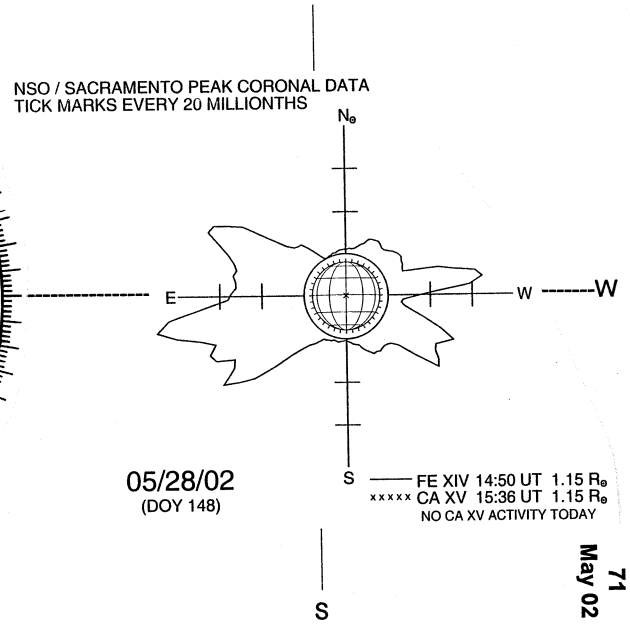

71
May 02