# MAY 23, 2002 ( P= -18.65, Bo = -1.76, Lo = 7.12)

## KITT PEAK MAGNETOGRAM

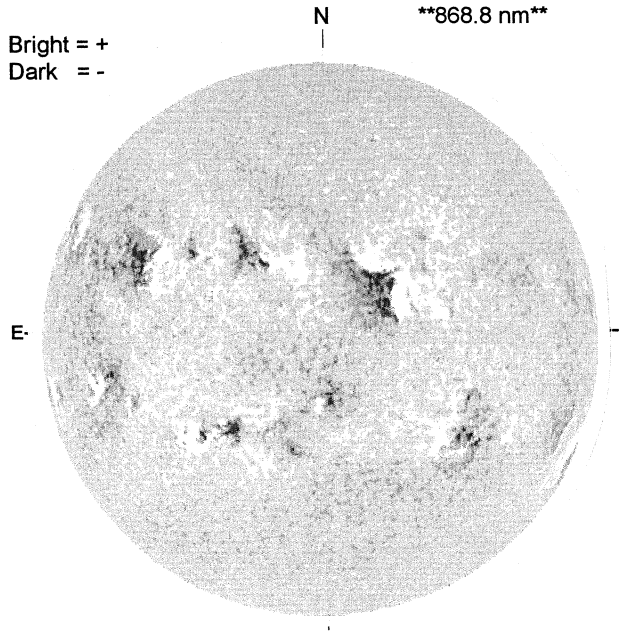


1601 UT

## STANFORD MAGNETOGRAM

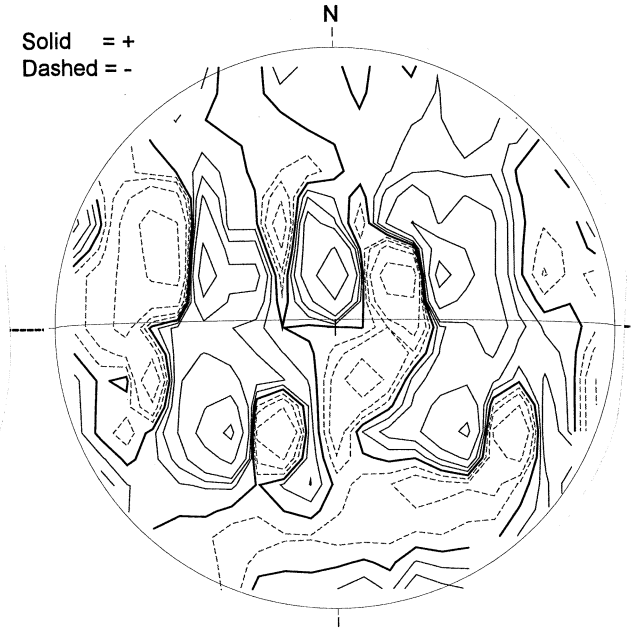


2344 UT

## MT. WILSON MAGNETOGRAM

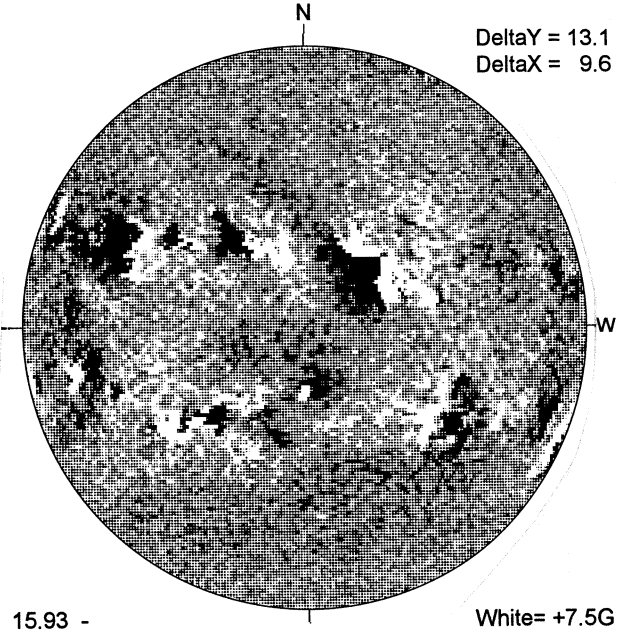


15.93 -
16.85 UT

White= +7.5G
Black = -7.5G

## MEUDON H-ALPHA

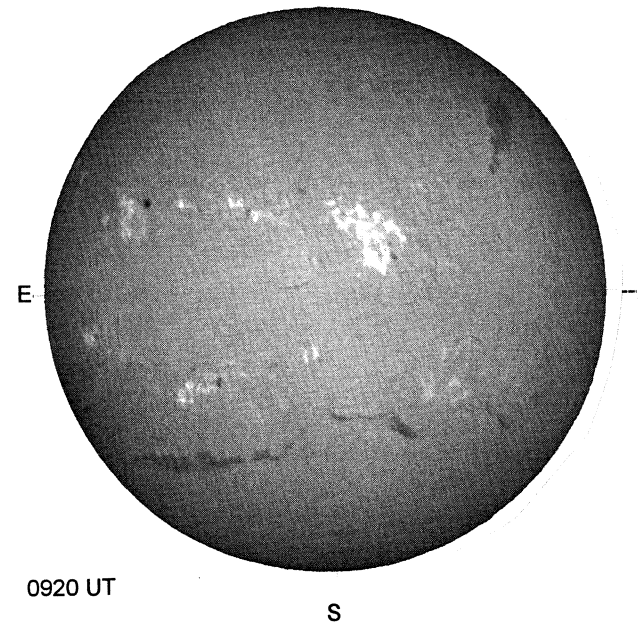


0920 UT

S

## RAMEY SUNSPOT

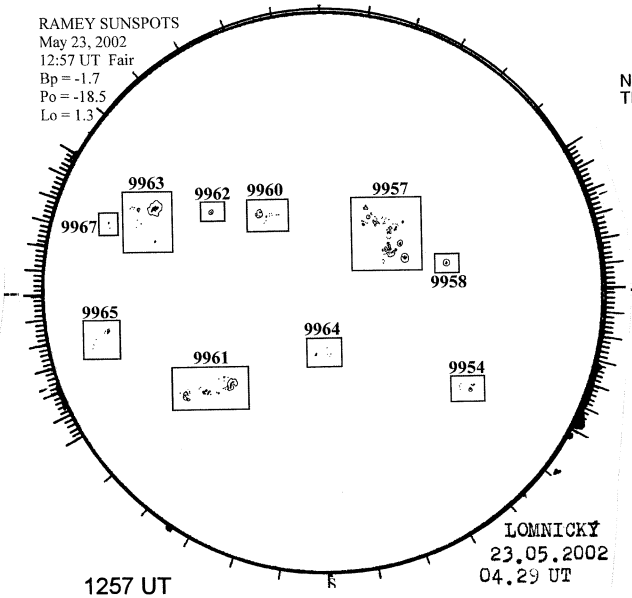


1257 UT
0429 UT LOMN Prom S

## SACRAMENTO PEAK CORONA (1.15 Radii)

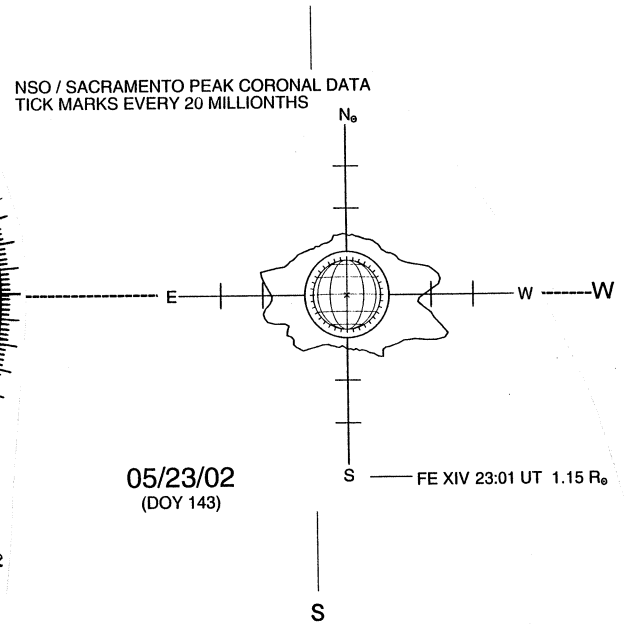


05/23/02
(DOY 143)

S