MAY 17, 2002 (P= -20.48, Bo = -2.46, Lo = 86.49)

KITT PEAK MAGNETOGRAM

868.8 nm

Bright = +
Dark = -

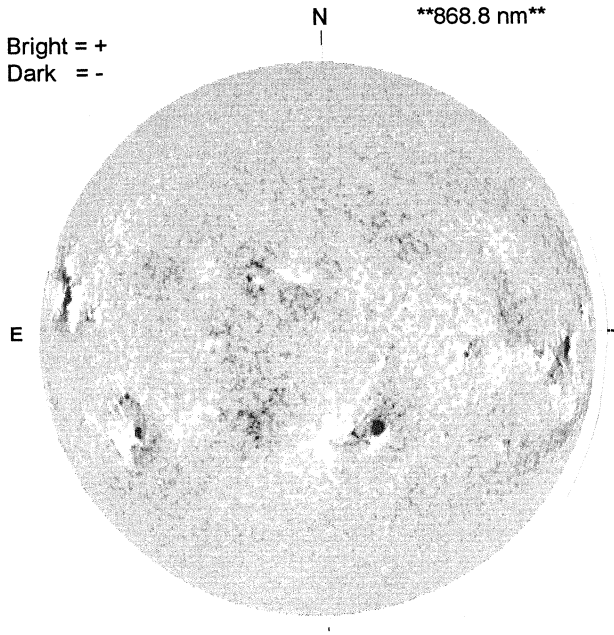

1458 UT

STANFORD MAGNETOGRAM

Solid = +
Dashed = -

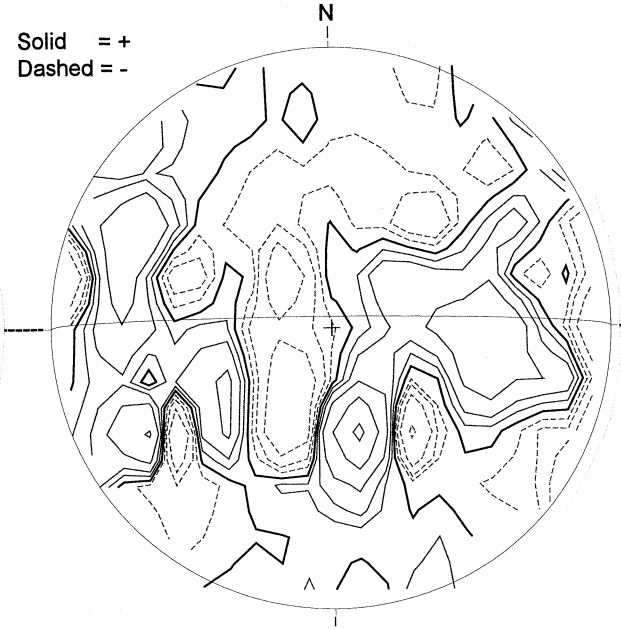

2106 UT

MT. WILSON MAGNETOGRAM

DeltaY = 13.1
DeltaX = 9.6

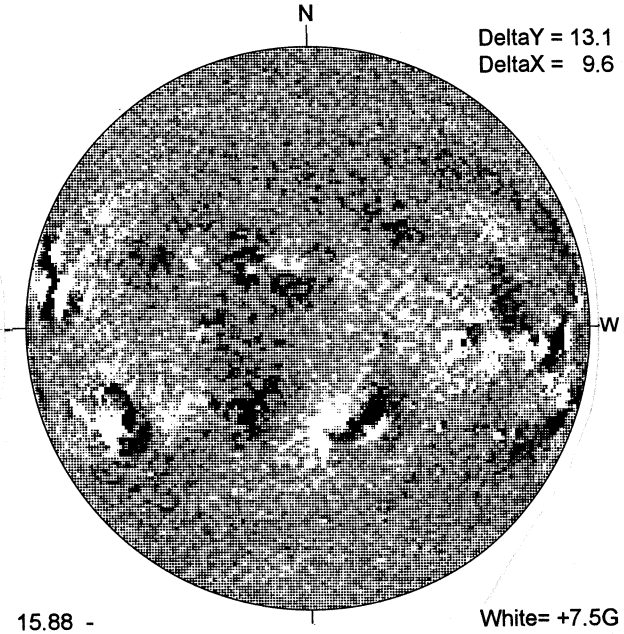

15.88 -
16.80 UT

White= +7.5G
Black = -7.5G

MEUDON H-ALPHA

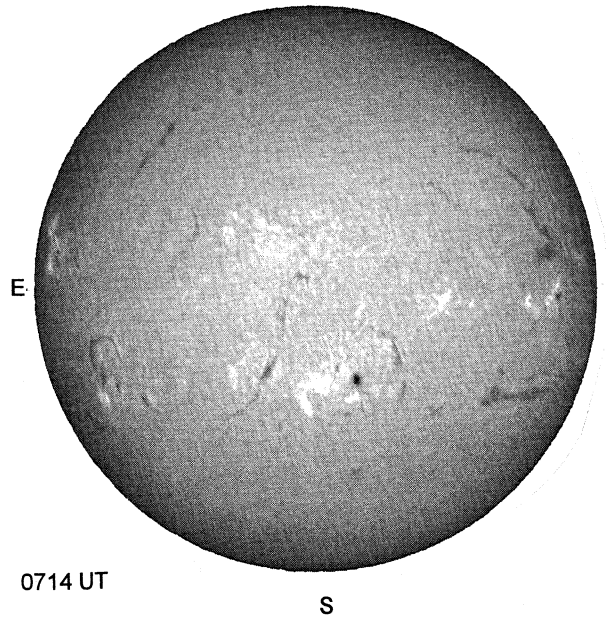

0714 UT

RAMEY SUNSPOT

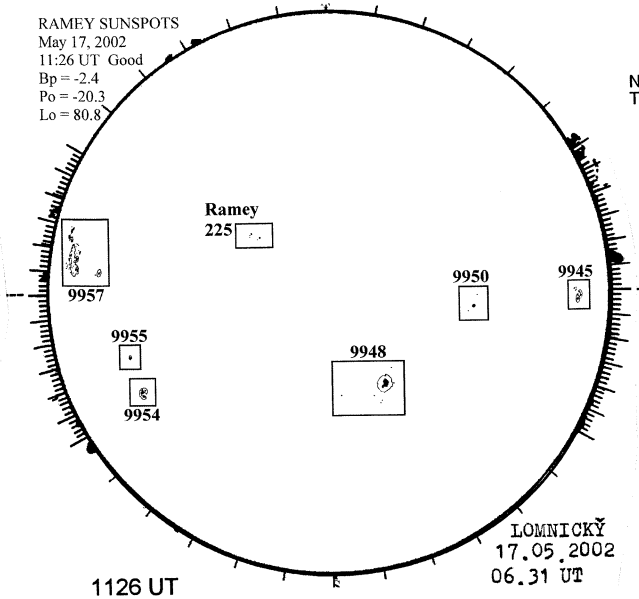

1126 UT
0631 UT LOMN Prom S

SACRAMENTO PEAK CORONA (1.15 Radii)

NSO / SACRAMENTO PEAK CORONAL DATA
TICK MARKS EVERY 20 MILLIONTHS

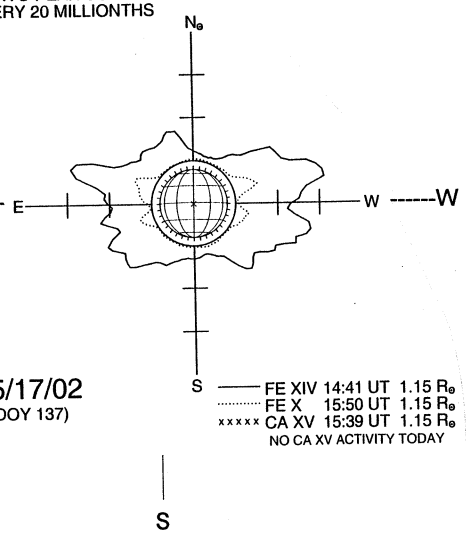

05/17/02
(DOY 137)

FE XIV 14:41 UT 1.15 Re
FE X 15:50 UT 1.15 Re
CA XV 15:39 UT 1.15 Re
NO CA XV ACTIVITY TODAY