MAY 7, 2002 (P= -23.00, Bo = -3.57, Lo = 218.73)

KITT PEAK MAGNETOGRAM

N

868.8 nm

Bright = +
Dark = -

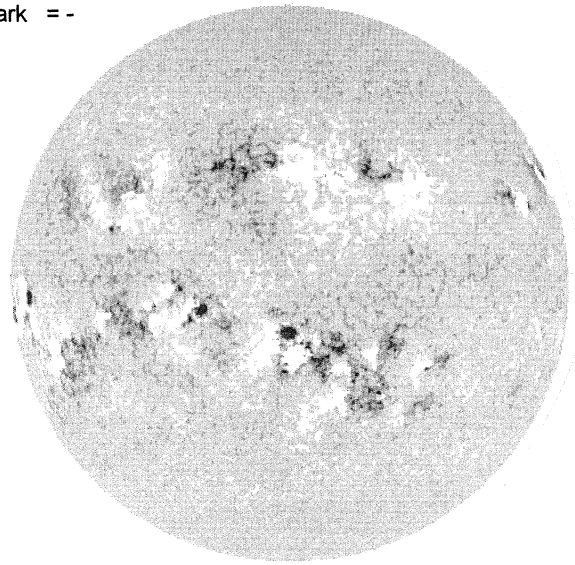

E

1523 UT

STANFORD MAGNETOGRAM

N

Solid = +
Dashed = -

1745 UT

MT. WILSON MAGNETOGRAM

N

DeltaY = 13.1
DeltaX = 9.6

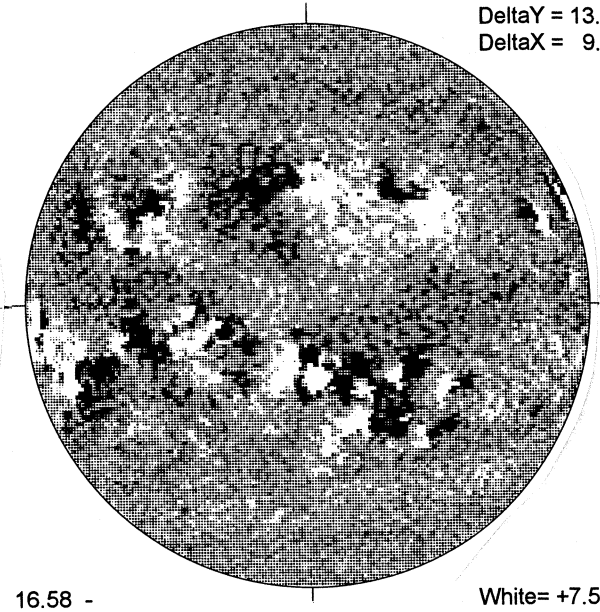

W

16.58 -
17.50 UT

White= +7.5G
Black = -7.5G

MEUDON H-ALPHA

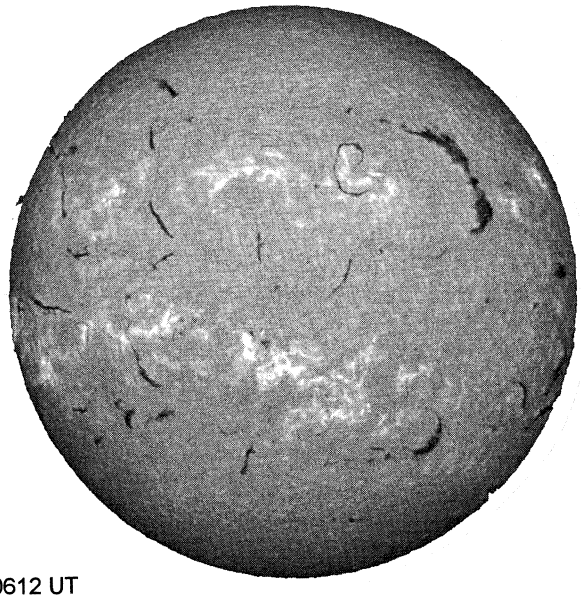

E

0612 UT

S

HOLLOMAN SUNSPOTS

HOLLOMAN SUNSPOTS
May 07, 2002
13:30 UT Poor
Bp = -3.5
Po = -22.8
Lo = 211.5

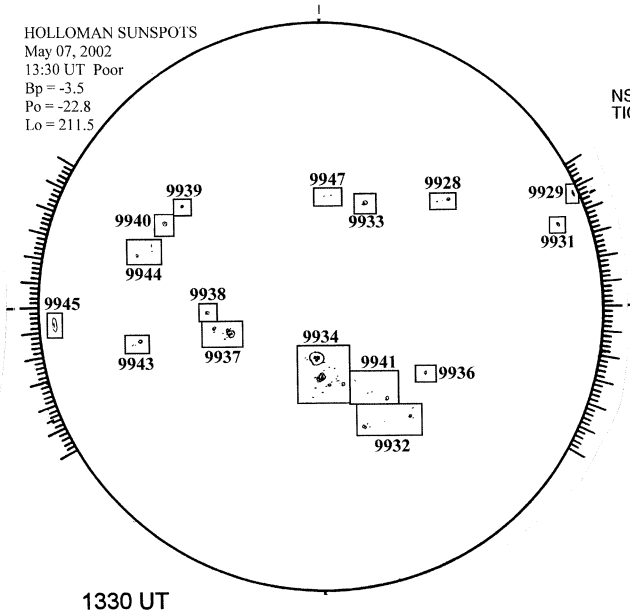

1330 UT

S

SACRAMENTO PEAK CORONA (1.15 Radii)----

NSO / SACRAMENTO PEAK CORONAL DATA
TICK MARKS EVERY 20 MILLIONTHS

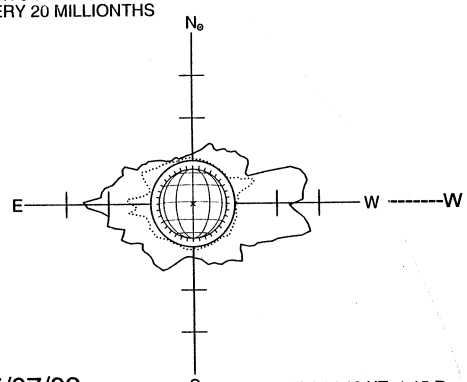

05/07/02
(DOY 127)

FE XIV 14:13 UT 1.15 R⊙
FE X 15:42 UT 1.15 R⊙

S