MAY 6, 2002 (P= -23.22, Bo = -3.67, Lo = 231.95)

KITT PEAK MAGNETOGRAM

N **868.8 nm**

Bright = +
Dark = -

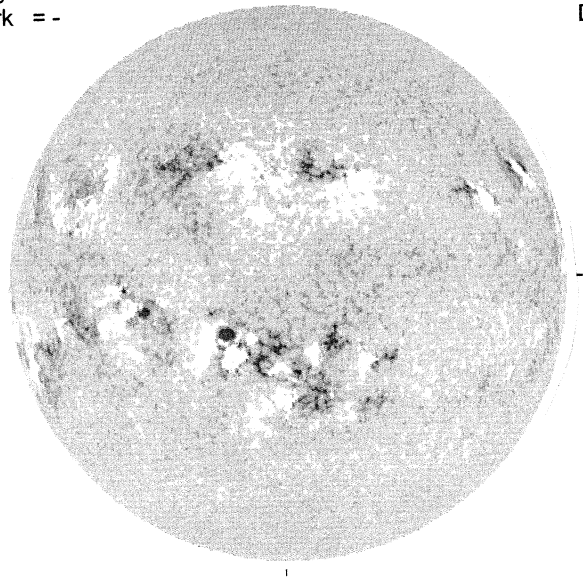

E--

1600 UT

STANFORD MAGNETOGRAM

N

Solid = +
Dashed = -

1839 UT

MT. WILSON MAGNETOGRAM

N

DeltaY = 13.1
DeltaX = 9.6

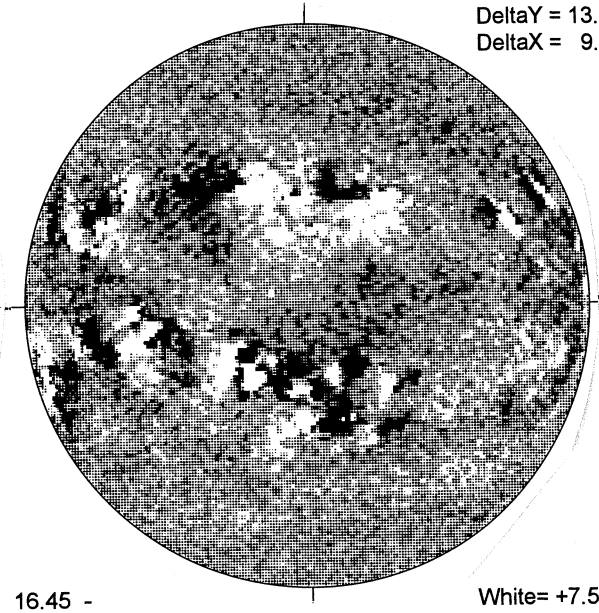

W

16.45 -
17.38 UT

White= +7.5G
Black = -7.5G

----- MEUDON H-ALPHA

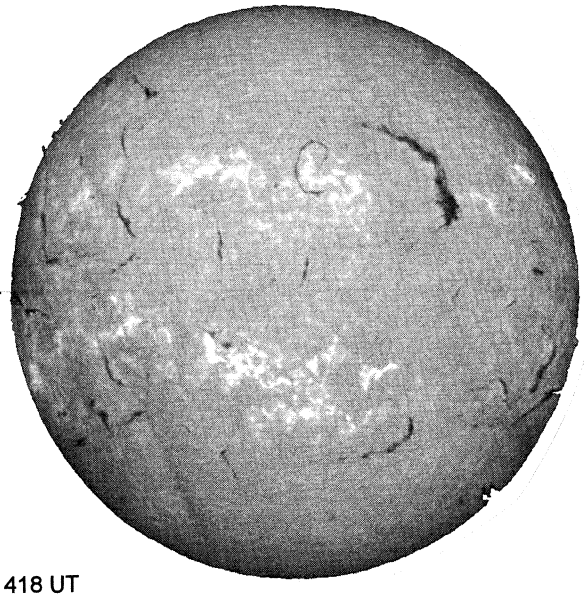

E-

1418 UT

S

HOLLOMAN SUNSPOT

HOLLOMAN SUNSPOTS
May 06, 2002
13:30 UT Fair
Bp = -3.6
Po = -23.0
Lo = 224.8

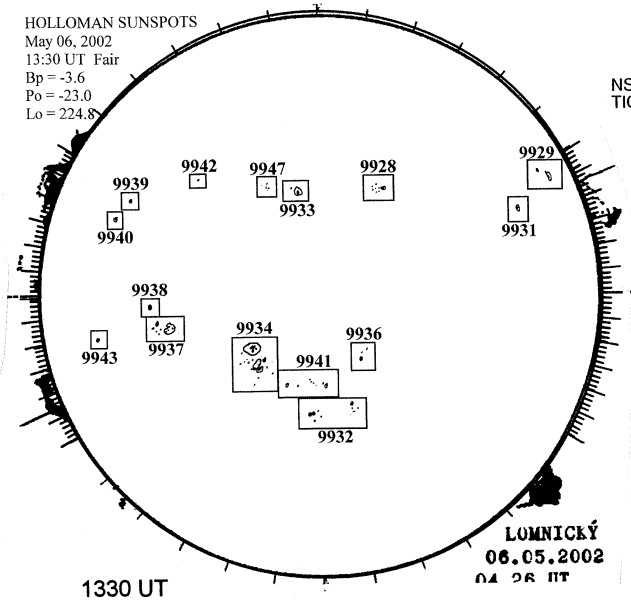

LOMNICKÝ
06.05.2002
04:26 UT

1330 UT
0426 UT LOMN Prom S

SACRAMENTO PEAK CORONA (1.15 Radii)----

NSO / SACRAMENTO PEAK CORONAL DATA
TICK MARKS EVERY 20 MILLIONTHS

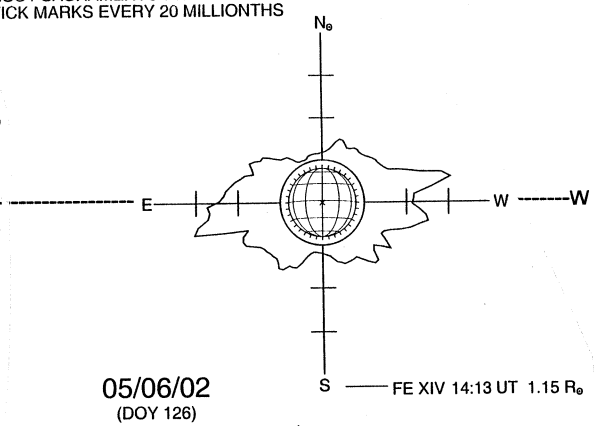

FE XIV 14:13 UT 1.15 $R_\odot$

05/06/02
(DOY 126)

S