APRIL 11, 2002 (P= -26.23, Bo = -5.92, Lo = 202.20)

KITT PEAK MAGNETOGRAM

Bright = +
Dark = -

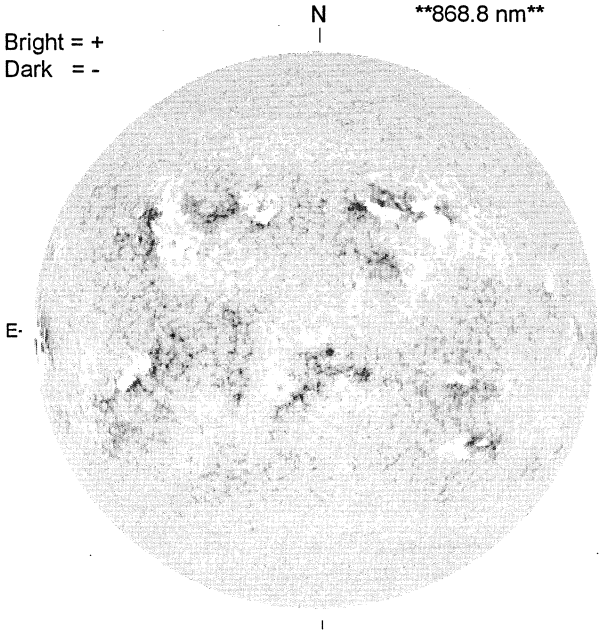

1539 UT

STANFORD MAGNETOGRAM

Solid = +
Dashed = -

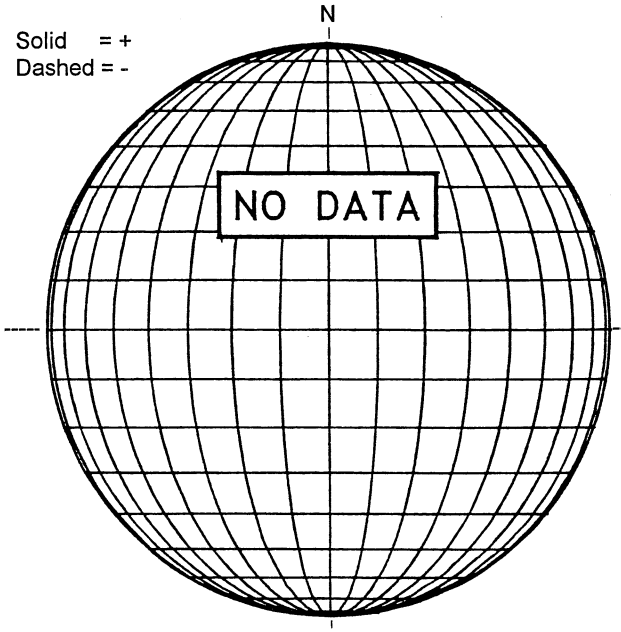

MT. WILSON MAGNETOGRAM

DeltaY = 13.1
DeltaX = 9.6

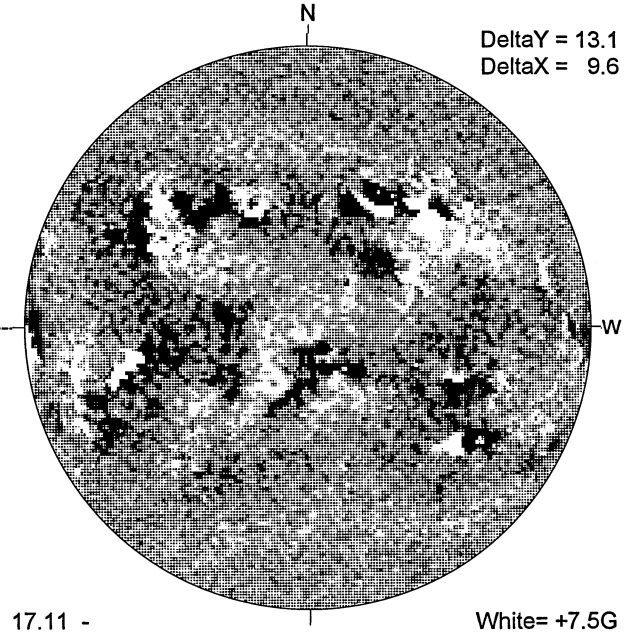

17.11 -
18.05 UT

White= +7.5G
Black = -7.5G

MEUDON H-ALPHA

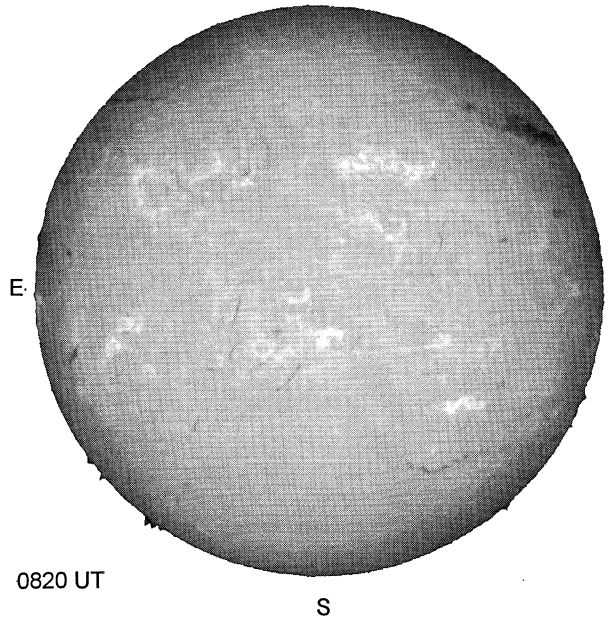

0820 UT

HOLLOMAN SUNSPOTS

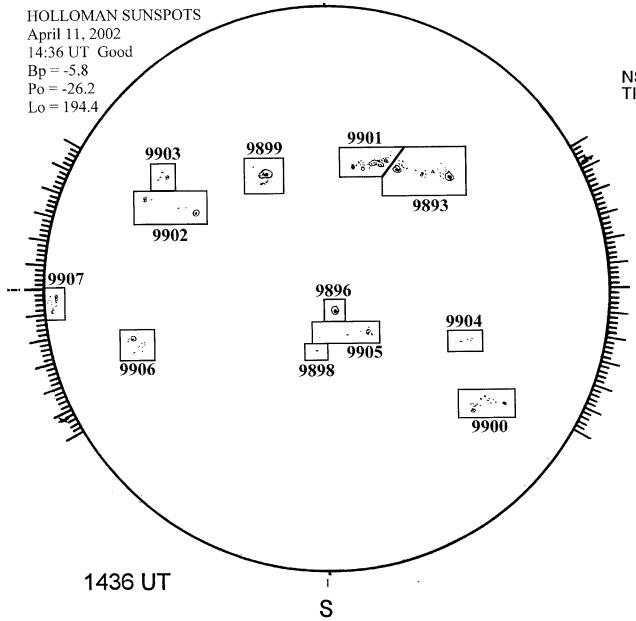

1436 UT

SACRAMENTO PEAK CORONA (1.15 Radii)

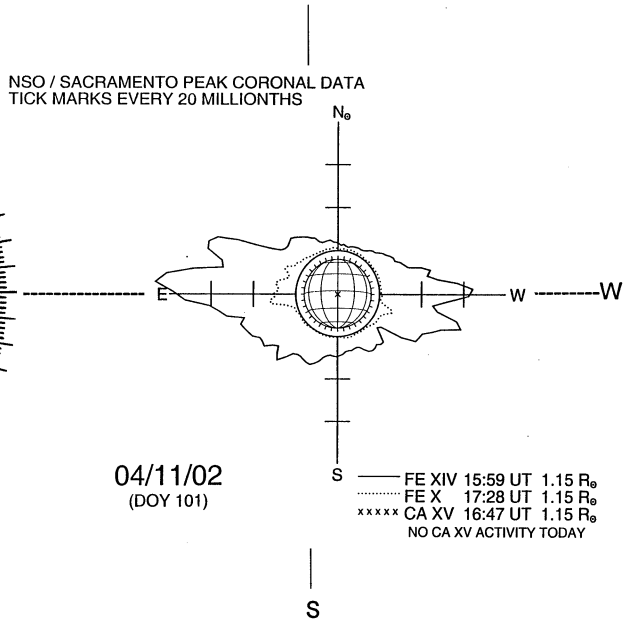

04/11/02
(DOY 101)