APRIL 3, 2002 (P= -26.23, Bo = -6.44, Lo = 307.78)

KITT PEAK MAGNETOGRAM

868.8 nm

Bright = +
Dark = -

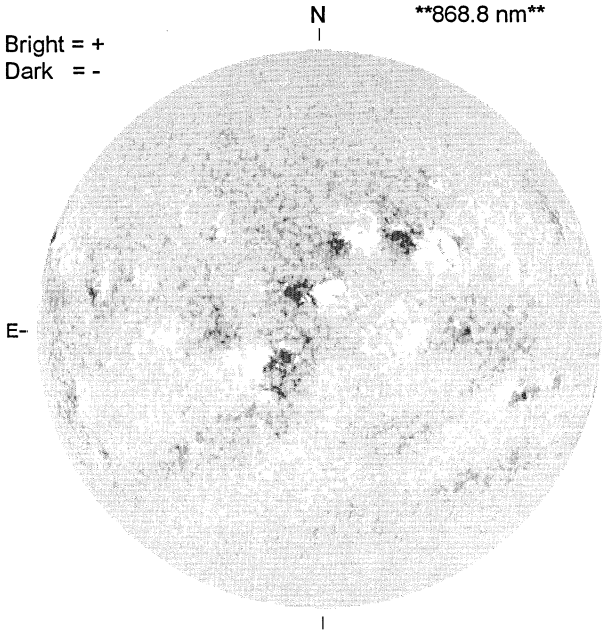

1556 UT

STANFORD MAGNETOGRAM

Solid = +
Dashed = -

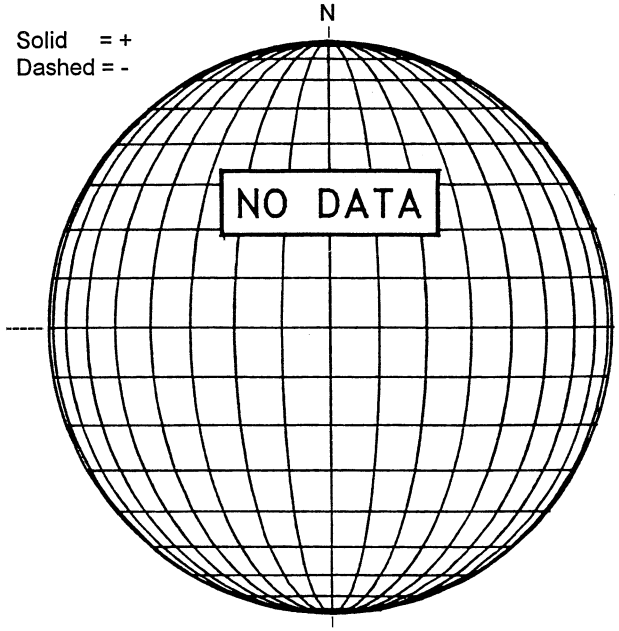

MT. WILSON MAGNETOGRAM

DeltaY = 13.1
DeltaX = 9.6

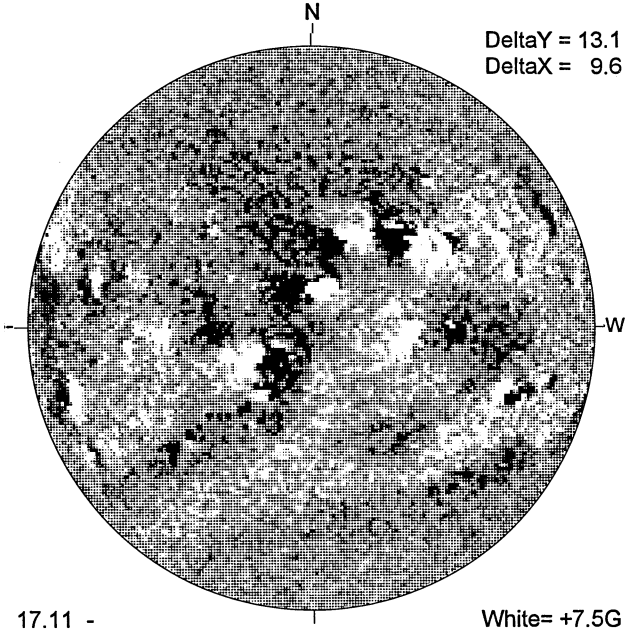

17.11 -
18.06 UT

White= +7.5G
Black = -7.5G

MEUDON H-ALPHA

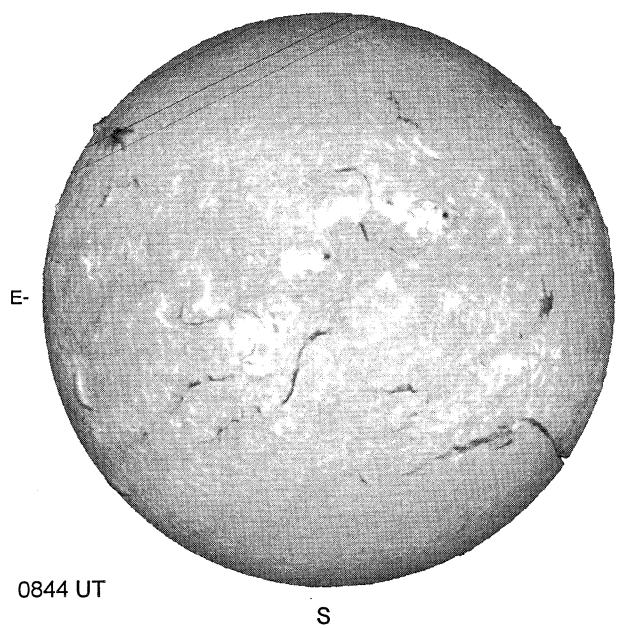

0844 UT

RAMEY SUNSPOT

RAMEY SUNSPOTS
April 03, 2002
12:15 UT Fair
Bp = -6.4
Po = -26.2
Lo = 301.1

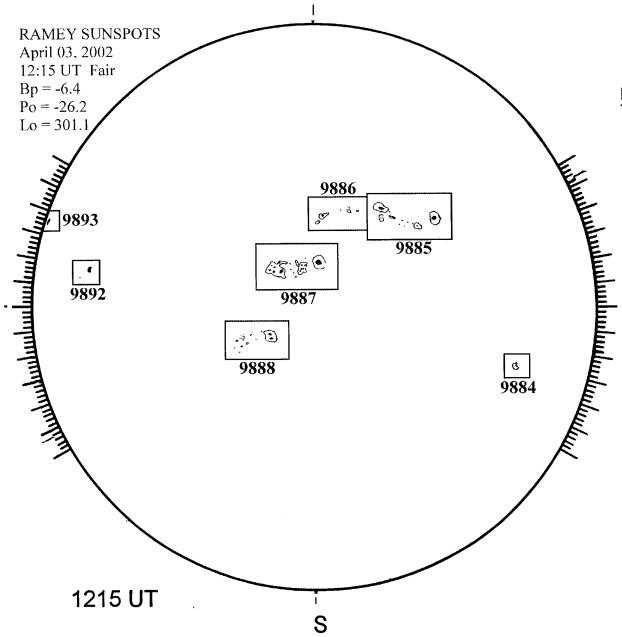

1215 UT

SACRAMENTO PEAK CORONA (1.15 Radii)

NSO / SACRAMENTO PEAK CORONAL DATA
TICK MARKS EVERY 20 MILLIONTHS

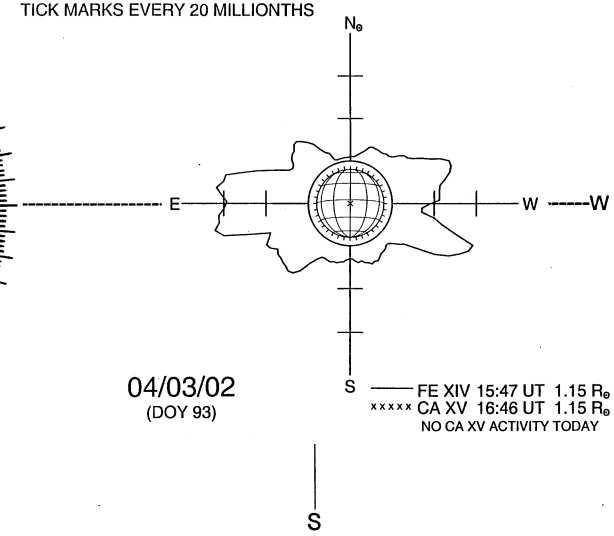

04/03/02
(DOY 93)

FE XIV 15:47 UT 1.15 $R_\odot$
xxxxx CA XV 16:46 UT 1.15 $R_\odot$
NO CA XV ACTIVITY TODAY