APRIL 1, 2002 (P= -26.16, Bo = -6.55, Lo = 334.17)

KITT PEAK MAGNETOGRAM

N

868.8 nm

Bright = +
Dark = -

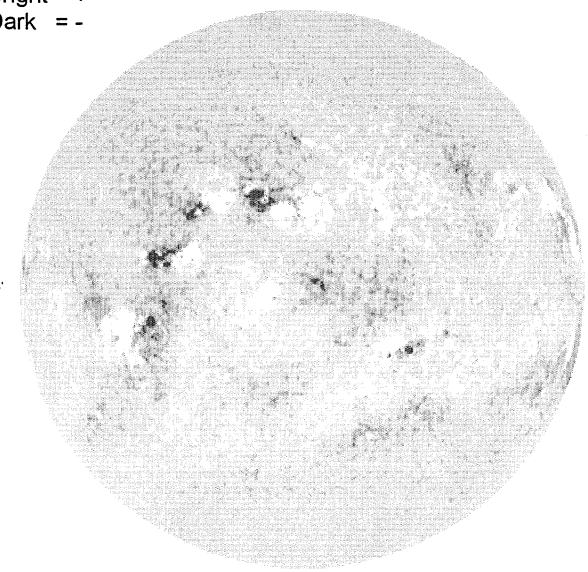

E

1542 UT

STANFORD MAGNETOGRAM

N

Solid = +
Dashed = -

2127 UT

MT. WILSON MAGNETOGRAM

N

DeltaY = 13.1
DeltaX = 9.6

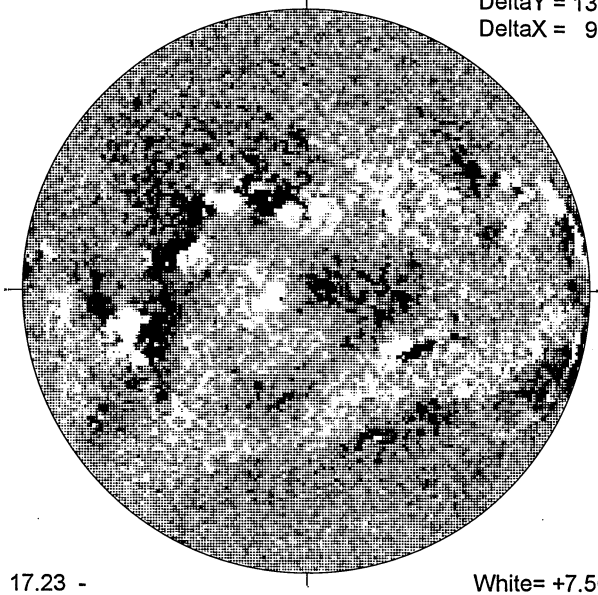

W

17.23 -
18.18 UT

White= +7.5G
Black = -7.5G

MEUDON H-ALPHA

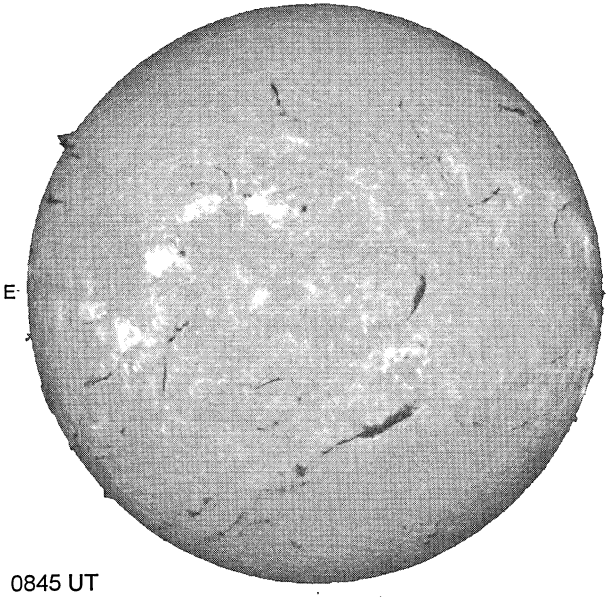

E

0845 UT

S

RAMEY SUNSPOT

RAMEY SUNSPOTS
April 01, 2002
11:43 UT Fair
Bp = -6.5
Po = -26.1
Lo = 327.8

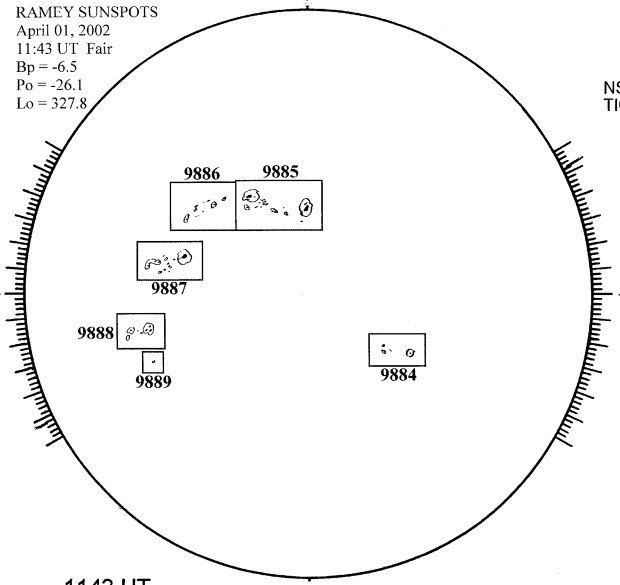

1143 UT

S

SACRAMENTO PEAK CORONA (1.15 Radii)

NSO / SACRAMENTO PEAK CORONAL DATA
TICK MARKS EVERY 20 MILLIONTHS

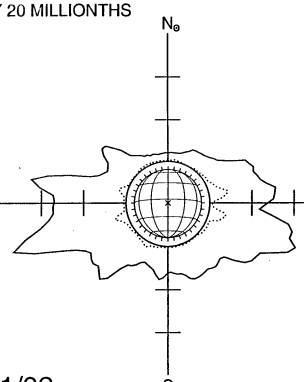

04/01/02
(DOY 91)

FE XIV 15:34 UT 1.15 R⊙
FE X 16:32 UT 1.15 R⊙
xxxxx CA XV 16:18 UT 1.15 R⊙
NO CA XV ACTIVITY TODAY

S