# MARCH 21, 2002 ( P= -25.25, Bo = -7.02, Lo = 119.24)

## KITT PEAK MAGNETOGRAM

Bright = +
Dark = -

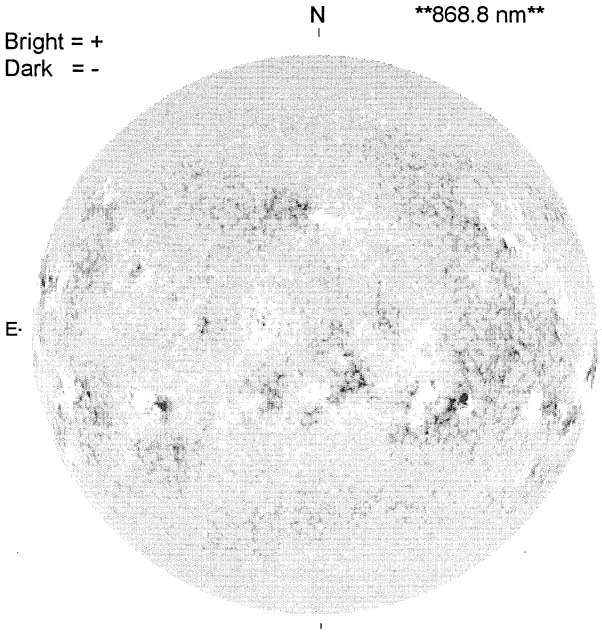


1548 UT

## STANFORD MAGNETOGRAM

Solid = +
Dashed = -

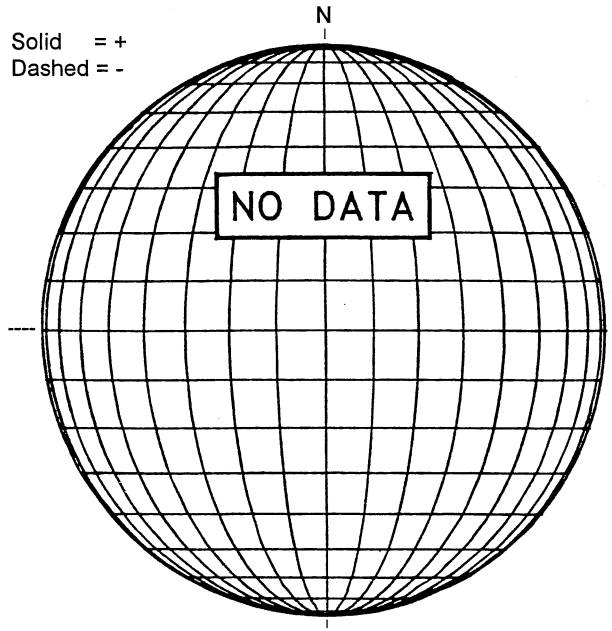


## MT. WILSON MAGNETOGRAM

DeltaY =
DeltaX =

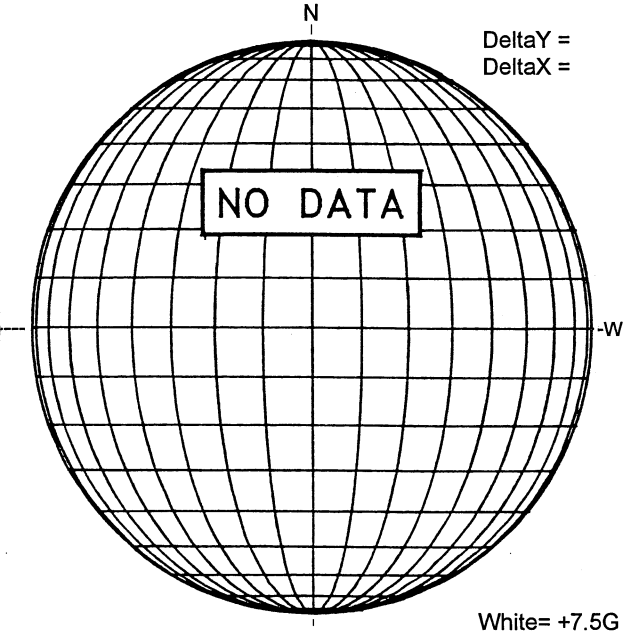


White= +7.5G
Black = -7.5G

## MEUDON H-ALPHA

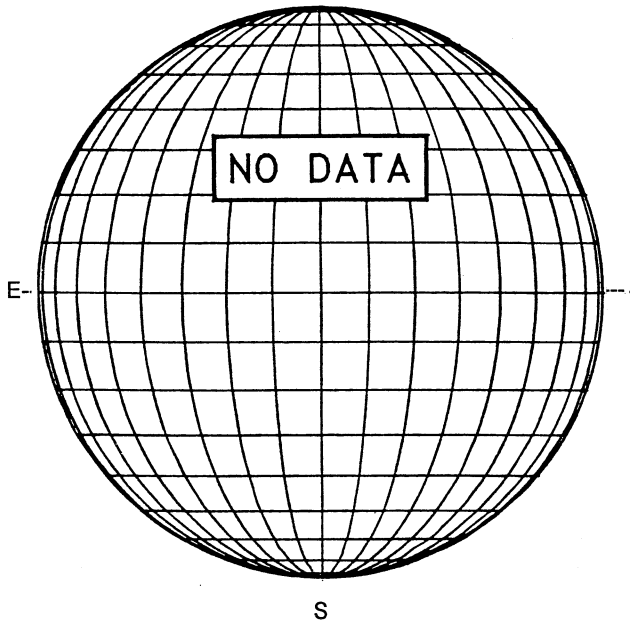


## RAMEY SUNSPOT

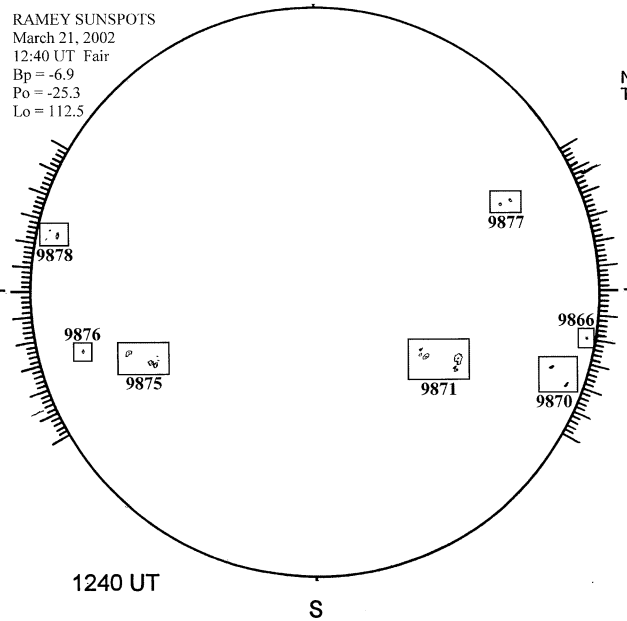


1240 UT
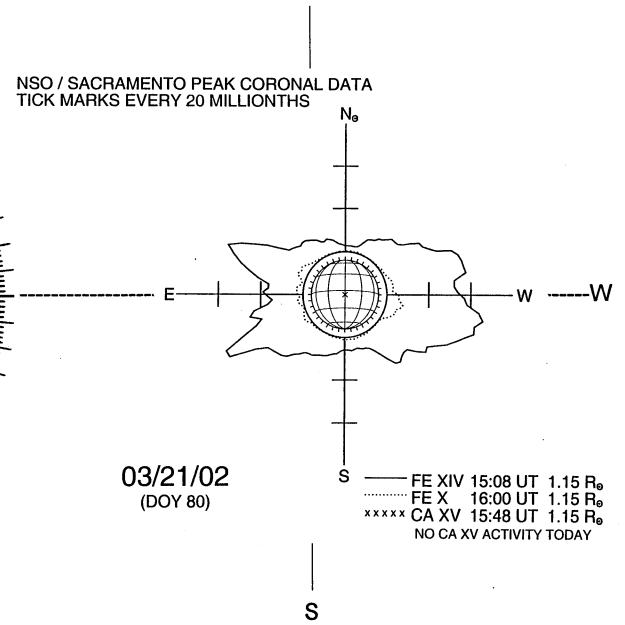
## SACRAMENTO PEAK CORONA (1.15 Radii)