# MARCH 13, 2002 ( P= -24.07, Bo = -7.21, Lo = 224.69)

## KITT PEAK MAGNETOGRAM

Bright = +
Dark = -

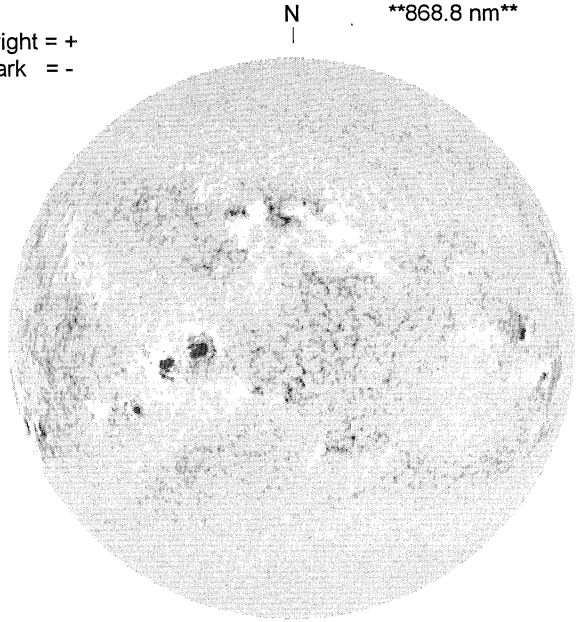


1536 UT

## STANFORD MAGNETOGRAM

Solid = +
Dashed = -

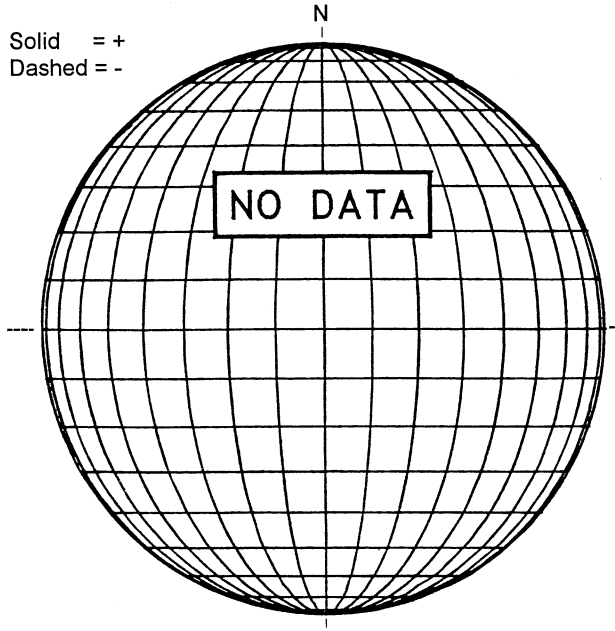


21.62 -
22.57 UT

## MT. WILSON MAGNETOGRAM

DeltaY = 13.1
DeltaX = 9.6

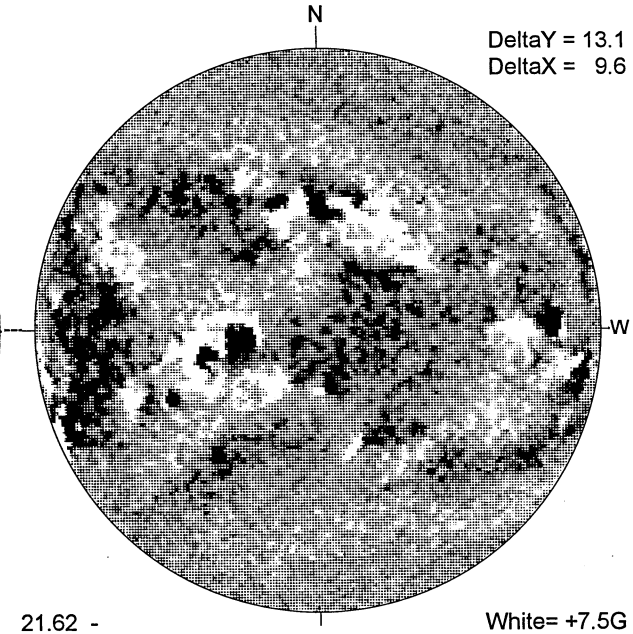


White= +7.5G
Black = -7.5G

## MEUDON H-ALPHA

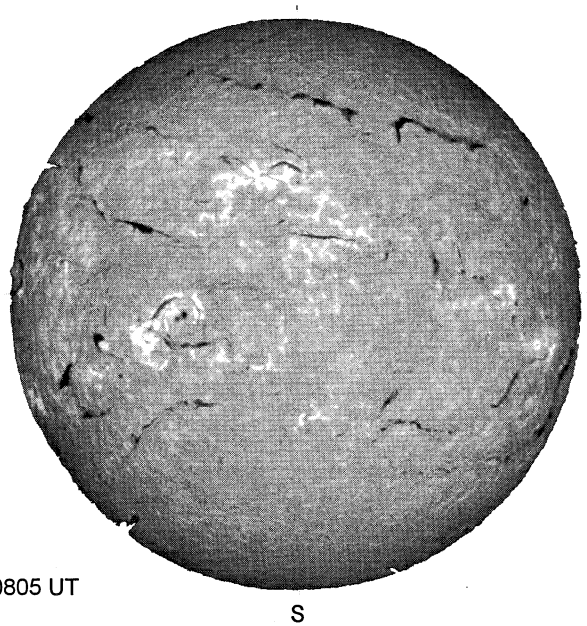


0805 UT

## RAMEY SUNSPOT

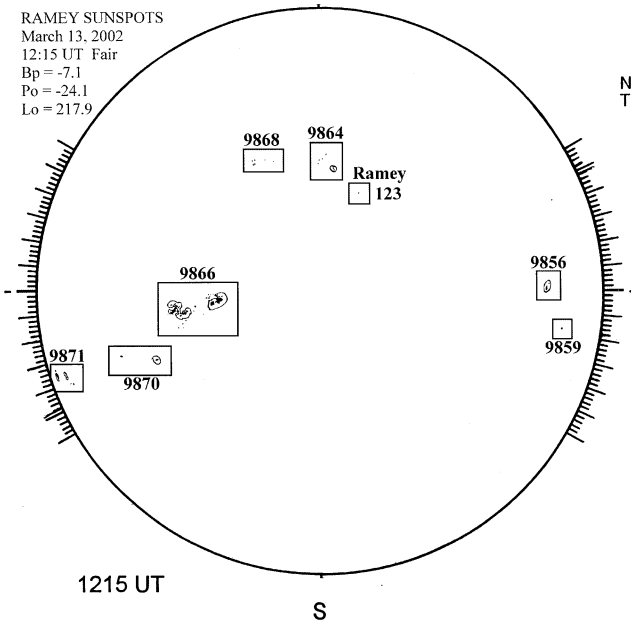


1215 UT
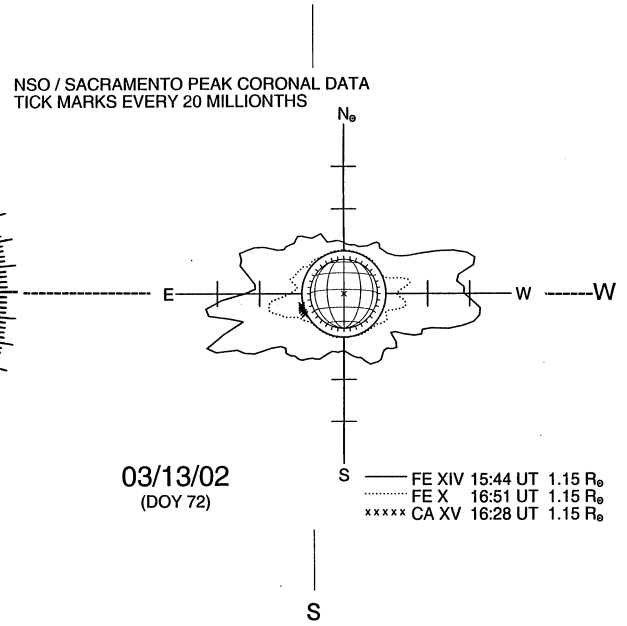
## SACRAMENTO PEAK CORONA (1.15 Radii)