MARCH 12, 2002 (P= -23.89, Bo = -7.22 Lo = 237.87)

KITT PEAK MAGNETOGRAM

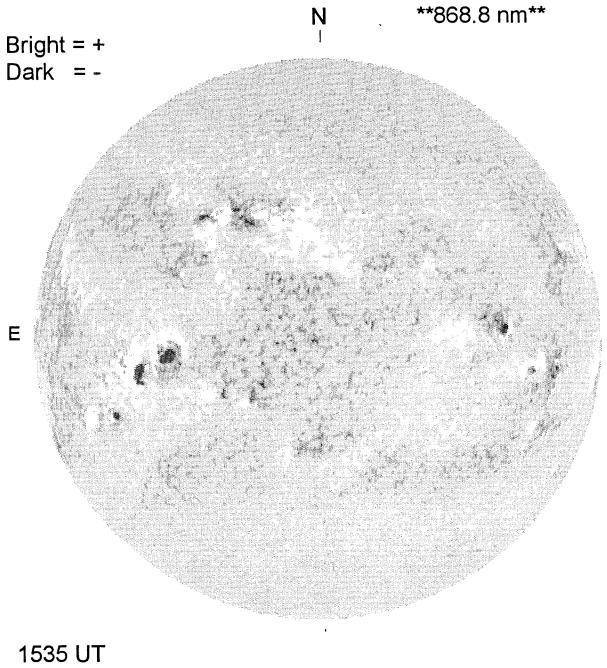

STANFORD MAGNETOGRAM

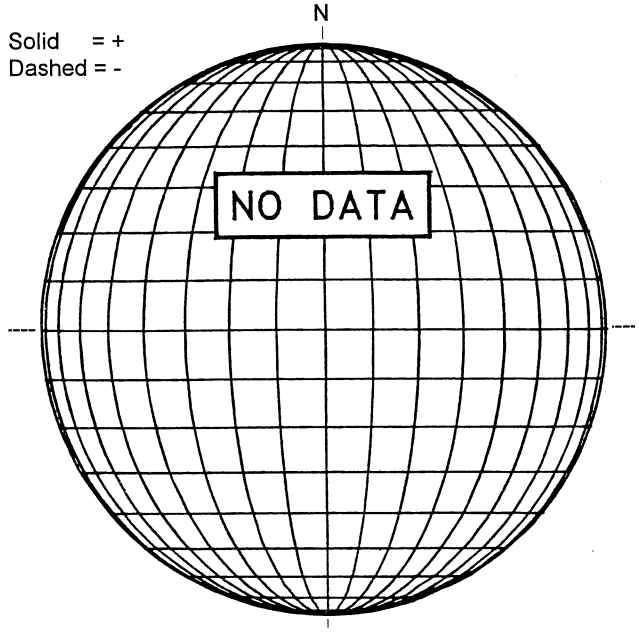

MT. WILSON MAGNETOGRAM

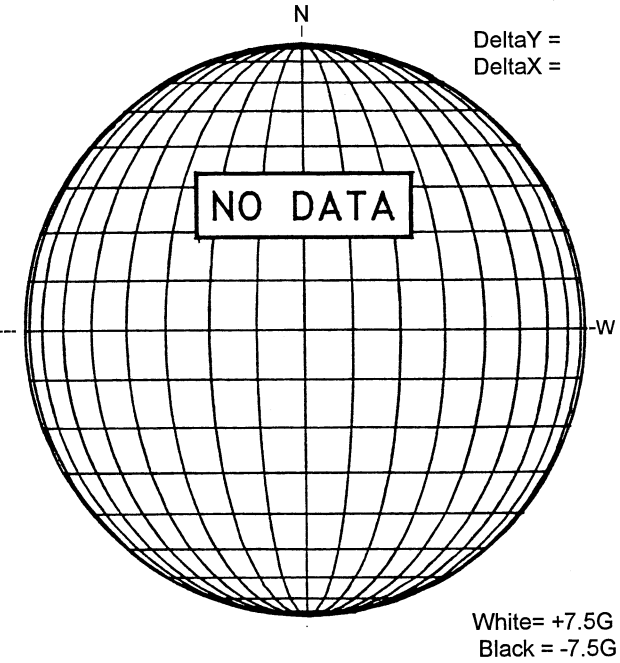

MEUDON H-ALPHA

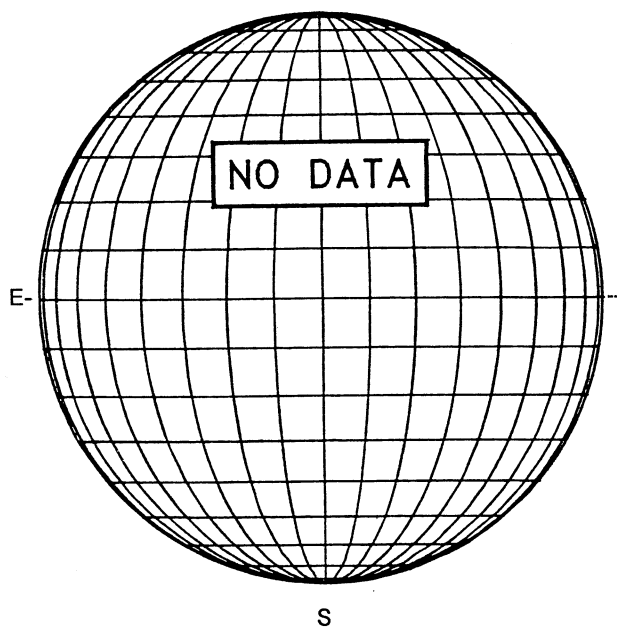

RAMEY SUNSPOTS

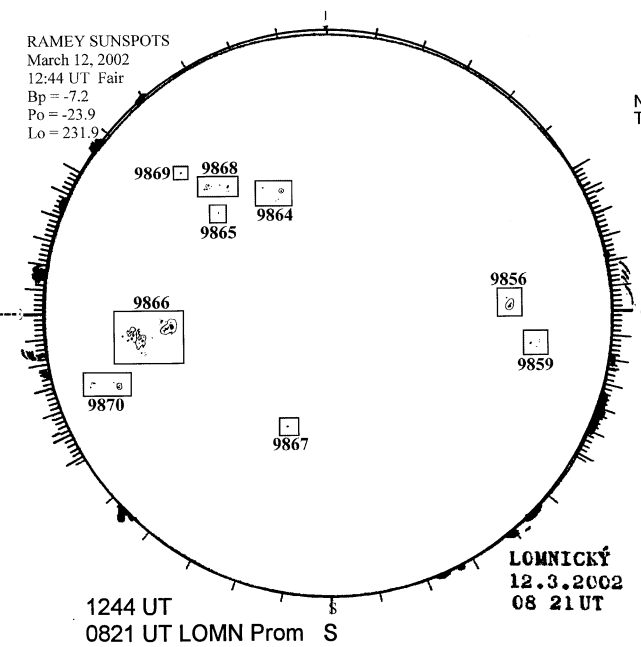

SACRAMENTO PEAK CORONA (1.15 Radii)----

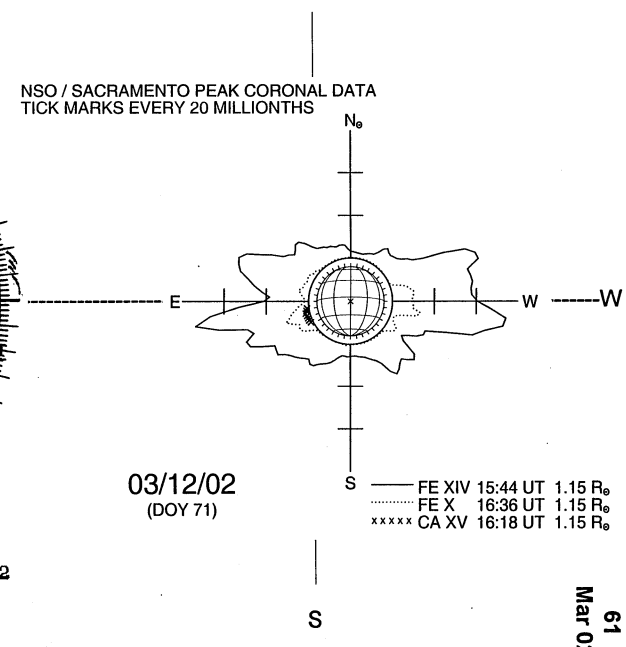

61
Mar 02