MARCH 11, 2002 (P= -23.70, Bo = -7.23, Lo = 251.04)

KITT PEAK MAGNETOGRAM

868.8 nm

Bright = +
Dark = -

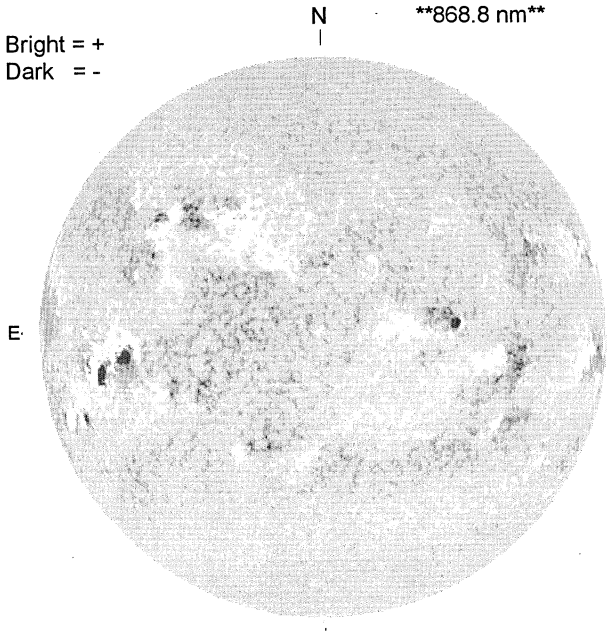

1541 UT

STANFORD MAGNETOGRAM

Solid = +
Dashed = -

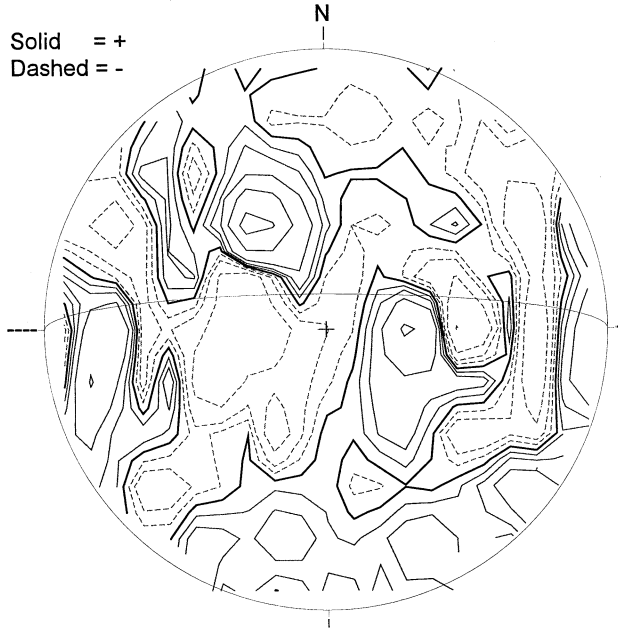

1916 UT

MT. WILSON MAGNETOGRAM

DeltaY = 13.1
DeltaX = 9.6

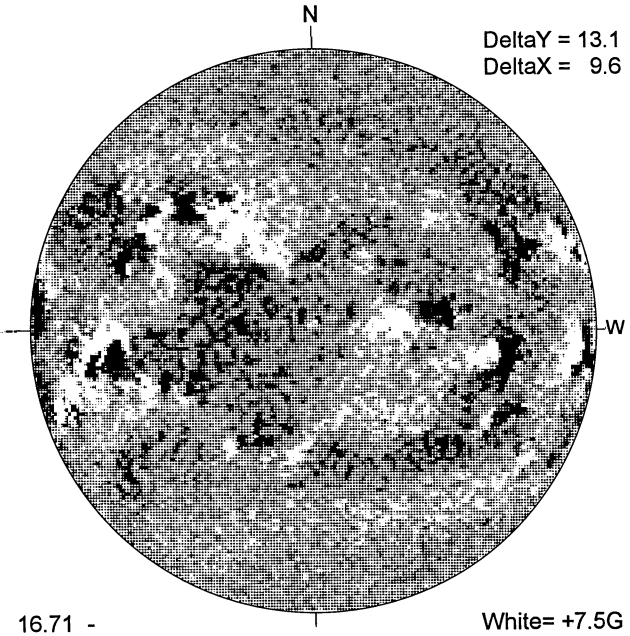

16.71 -
17.67 UT

White= +7.5G
Black = -7.5G

MEUDON H-ALPHA

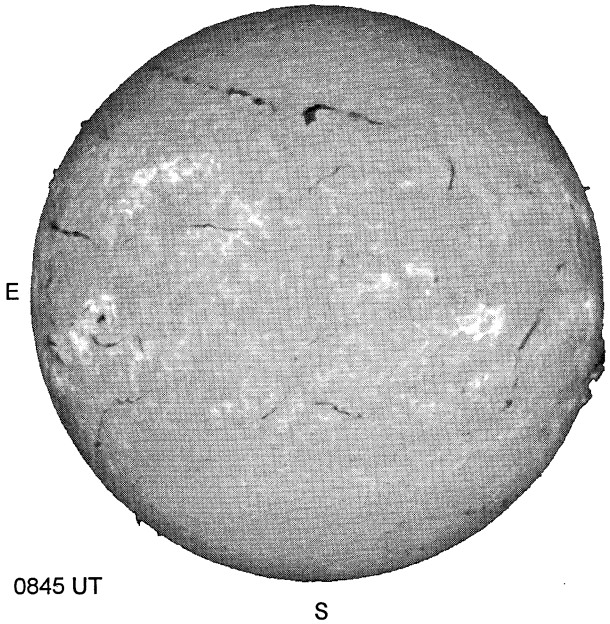

0845 UT

RAMEY SUNSPOTS

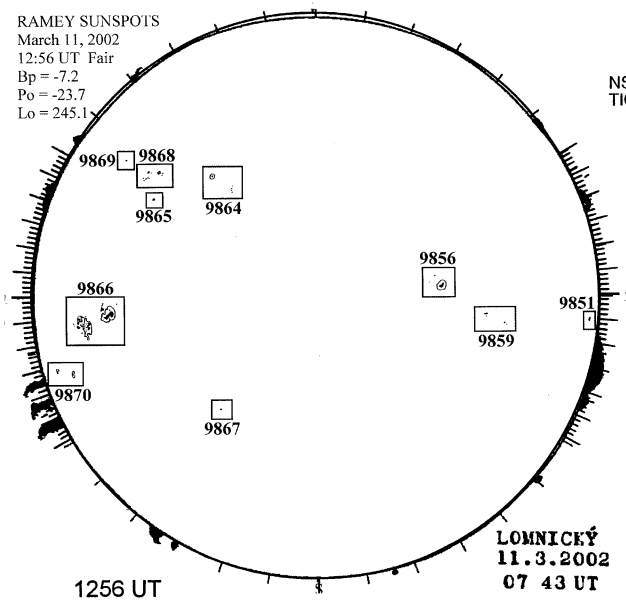

1256 UT
0743 UT LOMN Prom

SACRAMENTO PEAK CORONA (1.15 Radii)

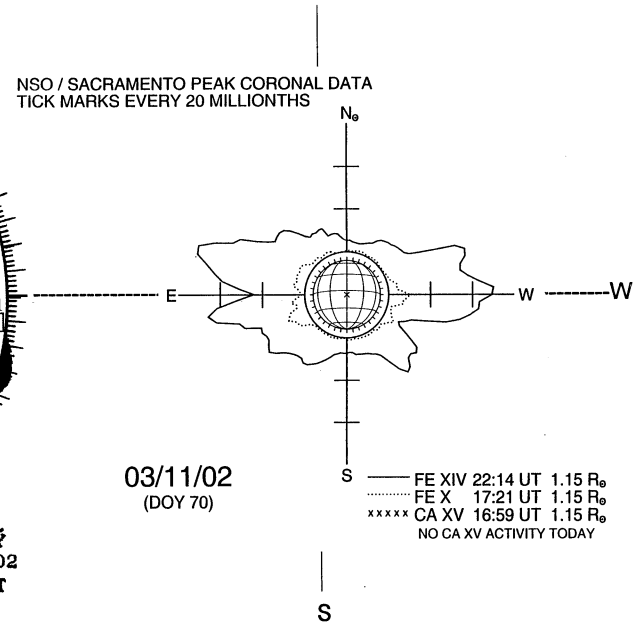

03/11/02
(DOY 70)