**MARCH 6, 2002 ( P= -22.68, Bo = -7.25, Lo = 316.92)**

KITT PEAK MAGNETOGRAM

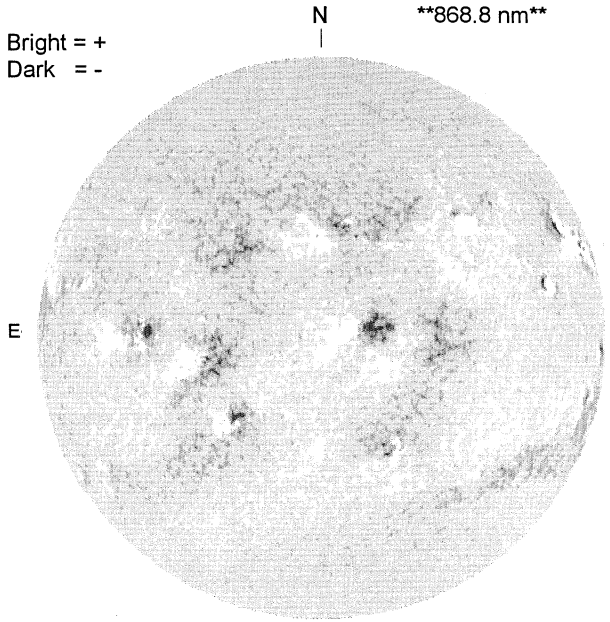


STANFORD MAGNETOGRAM

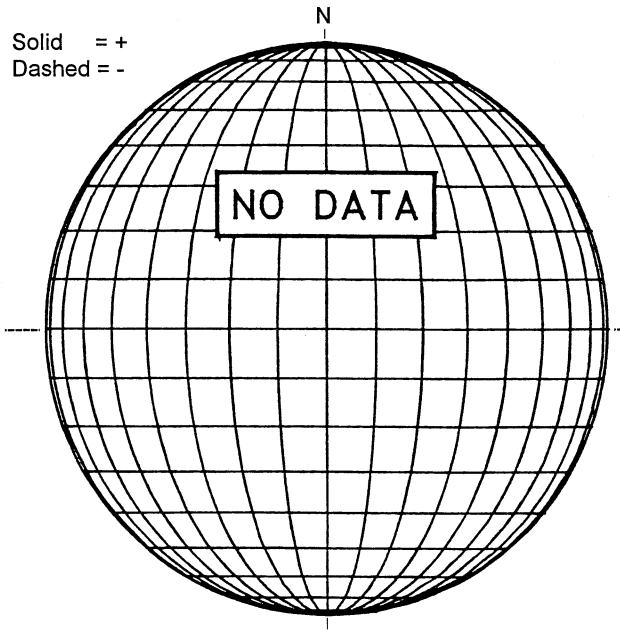


MT. WILSON MAGNETOGRAM

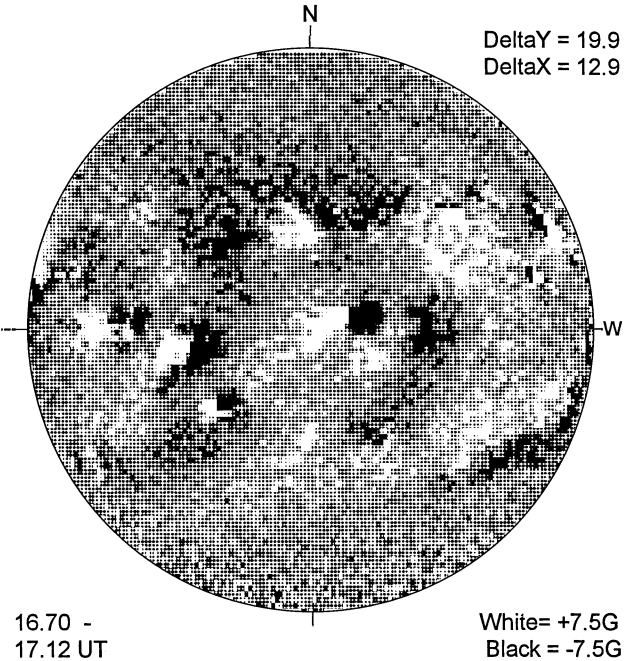


MEUDON H-ALPHA

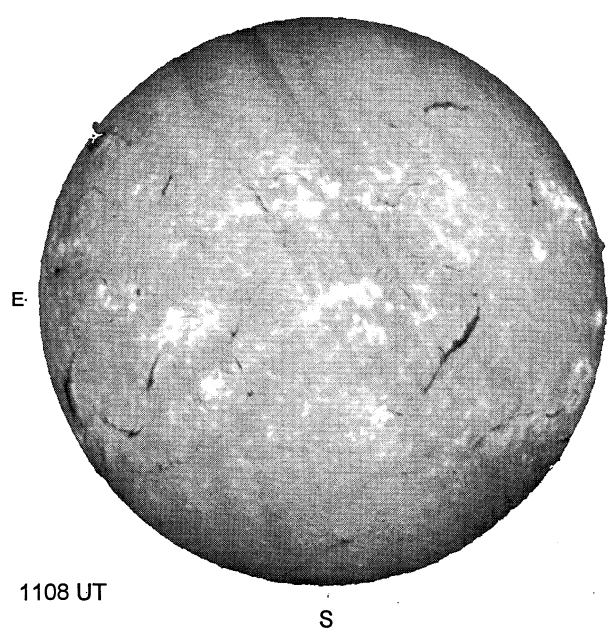


RAMEY SUNSPOT

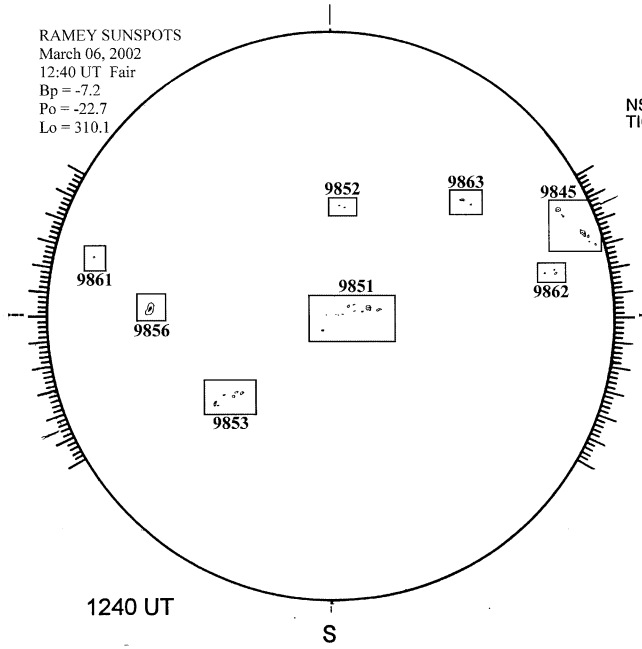

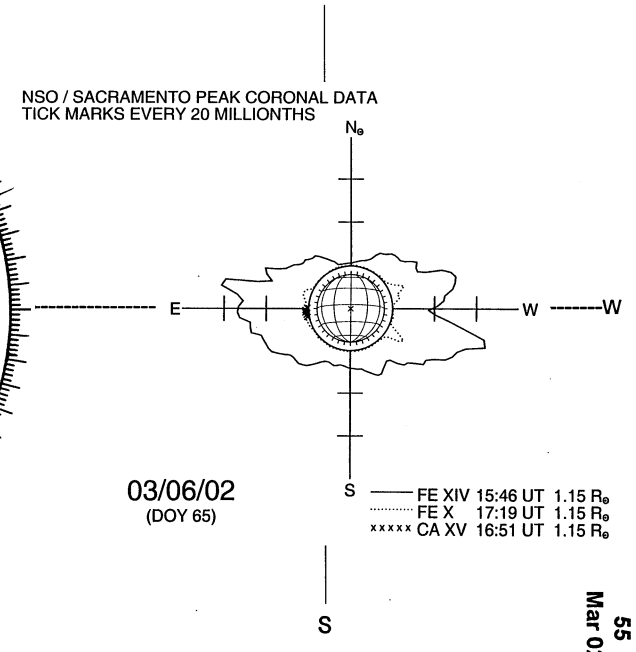
SACRAMENTO PEAK CORONA (1.15 Radii)