MARCH 5, 2002 (P= -22.45, Bo = -7.25, Lo = 330.10)

KITT PEAK MAGNETOGRAM

N

868.8 nm

Bright = +
Dark = -

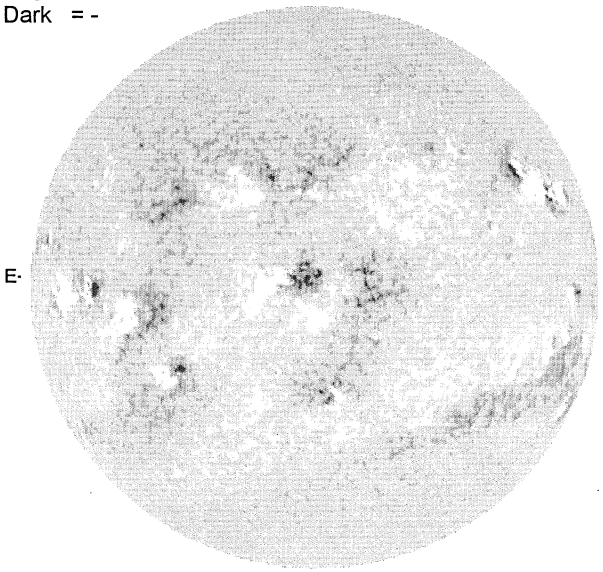

E

1549 UT

STANFORD MAGNETOGRAM

N

Solid = +
Dashed = -

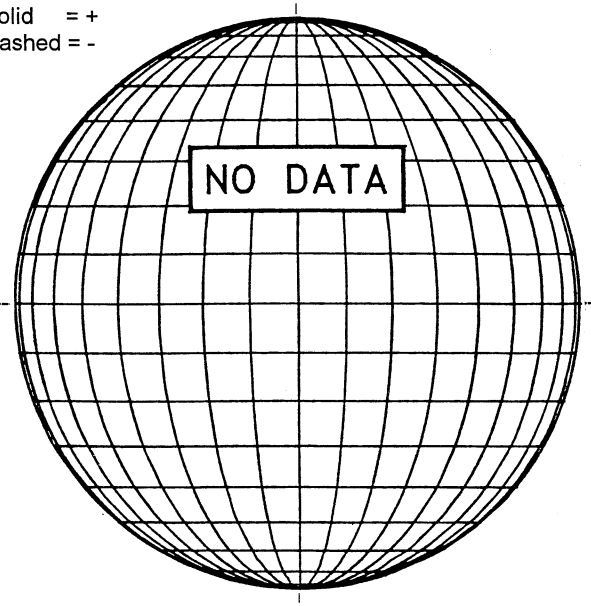

MT. WILSON MAGNETOGRAM

N

DeltaY = 13.1
DeltaX = 9.6

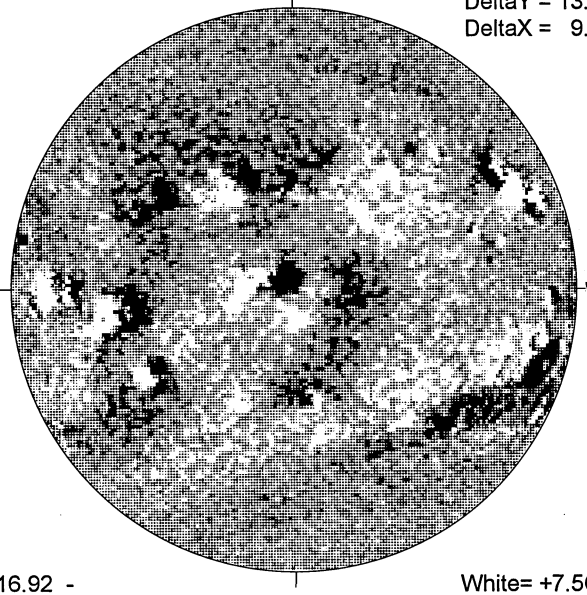

W

16.92 -
17.88 UT

White= +7.5G
Black = -7.5G

MEUDON H-ALPHA

E

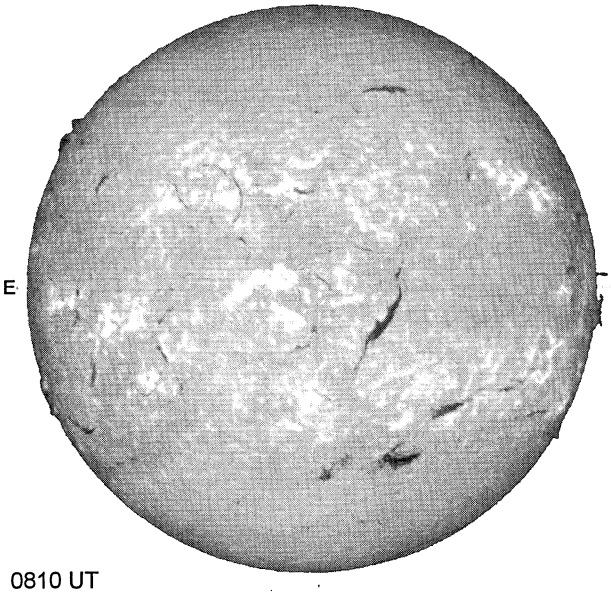

0810 UT

S

RAMEY SUNSPOT

RAMEY SUNSPOTS
March 05, 2002
13:05 UT Fair
Bp = -7.2
Po = -22.5
Lo = 323.2

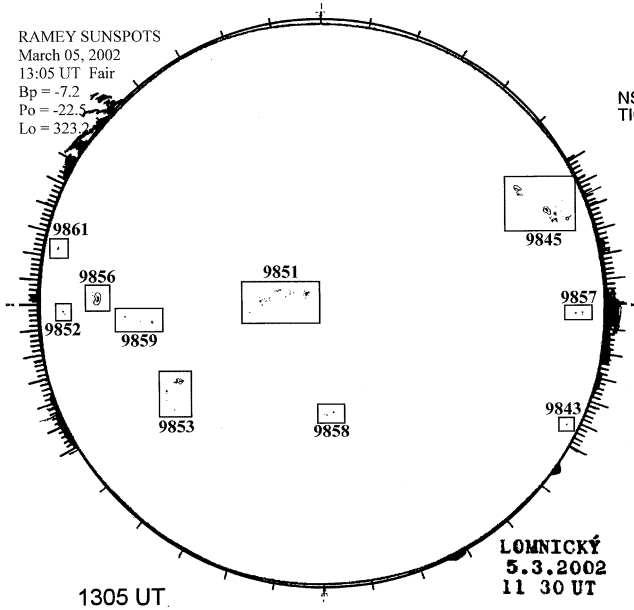

LOMNICKÝ
5.3.2002
11 30 UT

1305 UT
1130 UT LOMN Prom

S

SACRAMENTO PEAK CORONA (1.15 Radii)

NSO / SACRAMENTO PEAK CORONAL DATA
TICK MARKS EVERY 20 MILLIONTHS

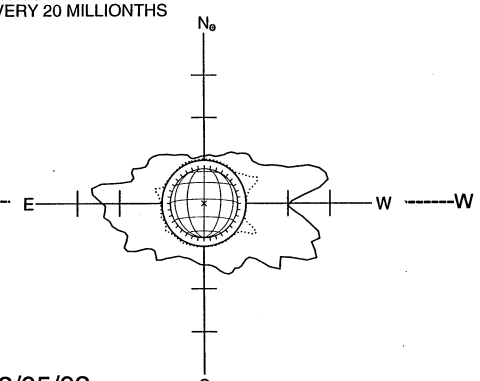

03/05/02
(DOY 64)

FE XIV 15:41 UT 1.15 R⊙
FE X 17:02 UT 1.15 R⊙
xxxxx CA XV 16:21 UT 1.15 R⊙
NO CA XV ACTIVITY TODAY

S