MARCH 4, 2002 (P= -22.22, Bo = -7.24, Lo = 343.27)

KITT PEAK MAGNETOGRAM

Bright = +
Dark = -

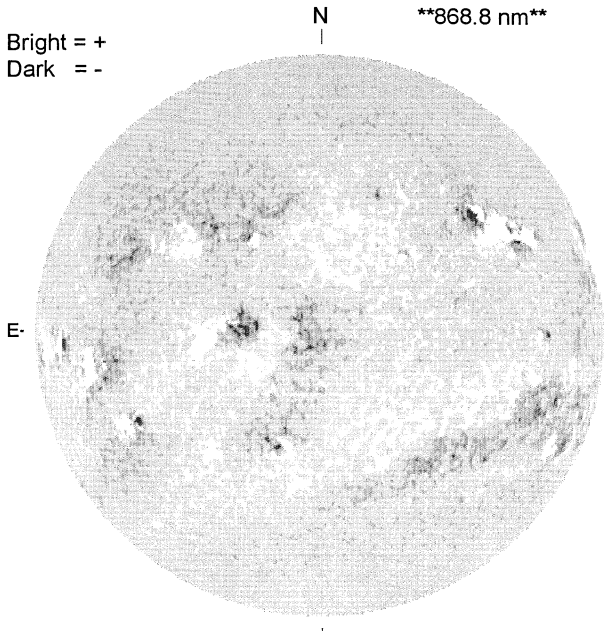

1514 UT

STANFORD MAGNETOGRAM

Solid = +
Dashed = -

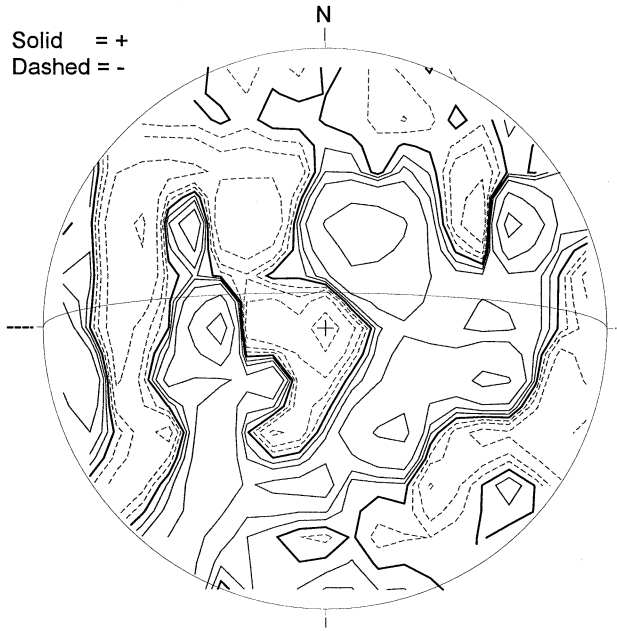

1747 UT

MT. WILSON MAGNETOGRAM

DeltaY = 13.1
DeltaX = 9.6

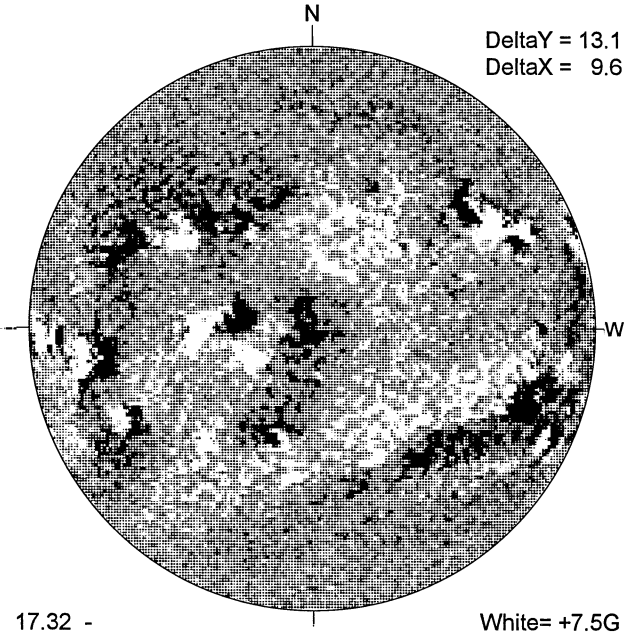

17.32 -
18.28 UT

White= +7.5G
Black = -7.5G

MEUDON H-ALPHA

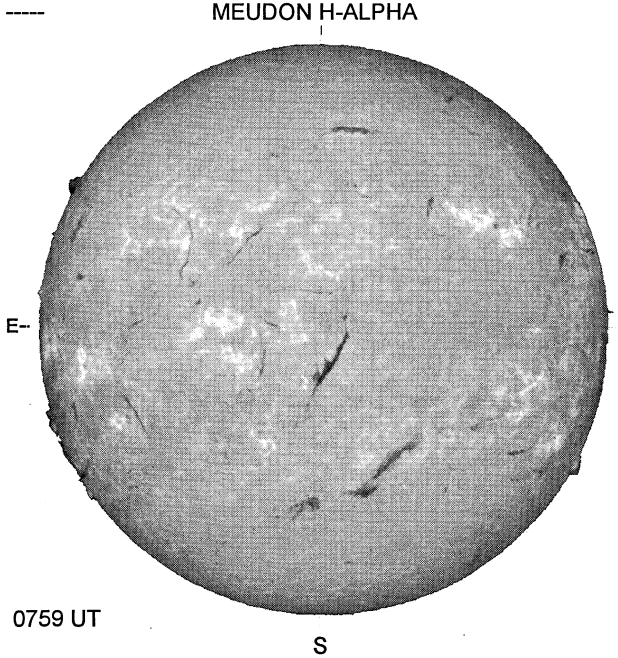

0759 UT

RAMEY SUNSPOT

RAMEY SUNSPOTS
March 04, 2002
11:52 UT Poor
Bp = -7.2
Po = -22.3
Lo = 336.8

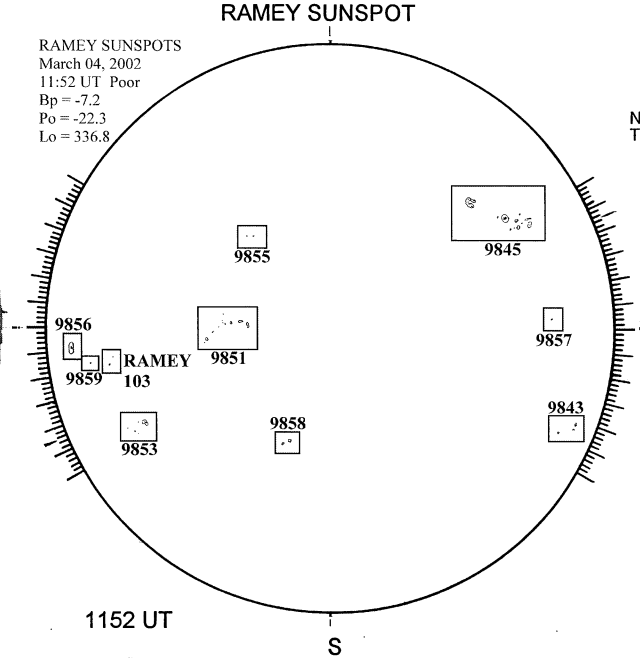

1152 UT

SACRAMENTO PEAK CORONA (1.15 Radii)----

NSO / SACRAMENTO PEAK CORONAL DATA
TICK MARKS EVERY 20 MILLIONTHS

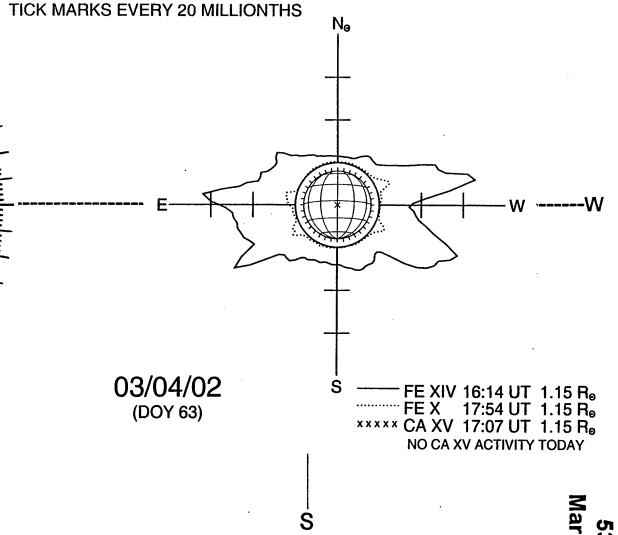

03/04/02
(DOY 63)

FE XIV 16:14 UT 1.15 $R_\odot$
FE X 17:54 UT 1.15 $R_\odot$
CA XV 17:07 UT 1.15 $R_\odot$
NO CA XV ACTIVITY TODAY