MARCH 1, 2002 (P= -21.49, Bo = -7.22, Lo = 22.79)

KITT PEAK MAGNETOGRAM

868.8 nm

Bright = +
Dark = -

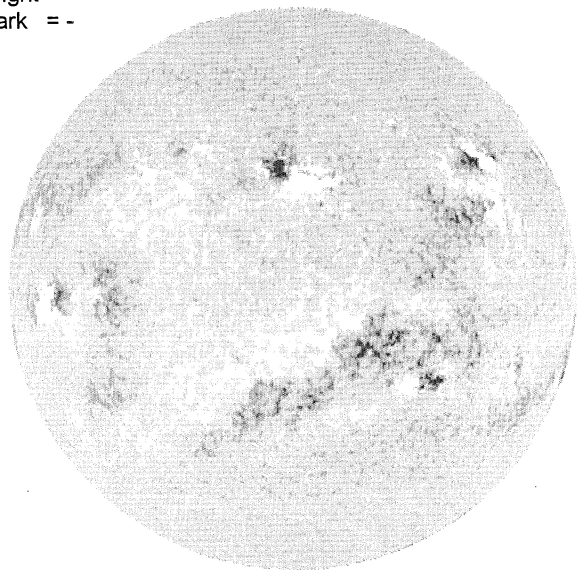

1640 UT

STANFORD MAGNETOGRAM

Solid = +
Dashed = -

1929 UT

MT. WILSON MAGNETOGRAM

DeltaY = 13.1
DeltaX = 9.6

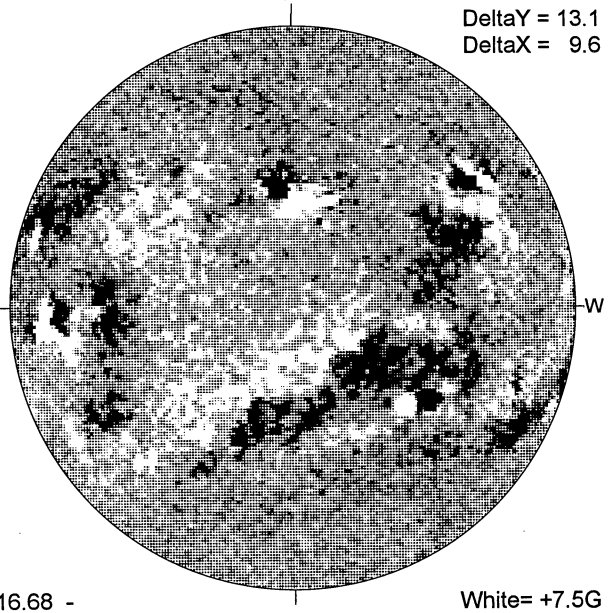

16.68 -
17.64 UT

White= +7.5G
Black = -7.5G

MEUDON H-ALPHA

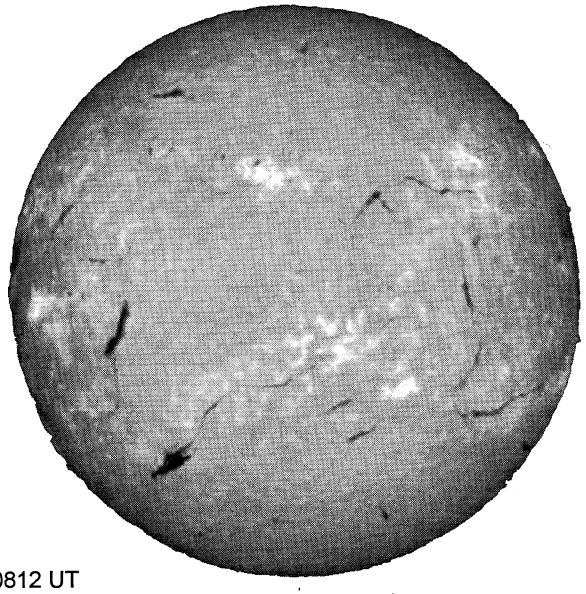

0812 UT

RAMEY SUNSPOT

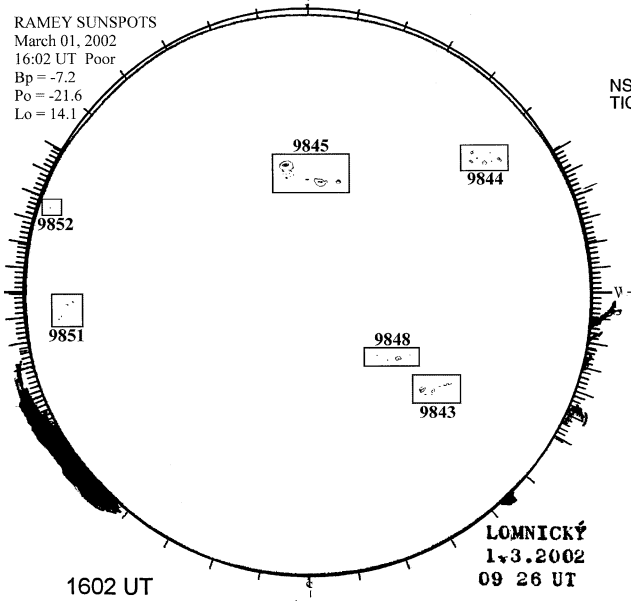

1602 UT
0926 UT LOMN Prom

SACRAMENTO PEAK CORONA (1.15 Radii)

NSO / SACRAMENTO PEAK CORONAL DATA
TICK MARKS EVERY 20 MILLIONTHS

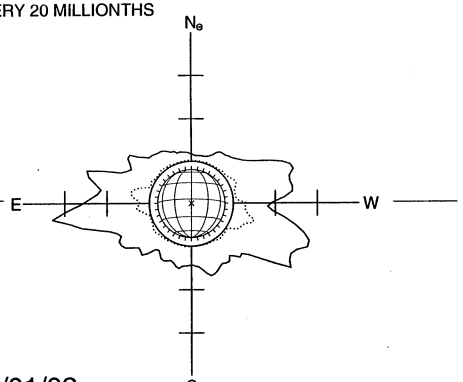

03/01/02
(DOY 60)

FE XIV 15:45 UT 1.15 Rθ
FE X 16:39 UT 1.15 Rθ
xxxxx CA XV 16:20 UT 1.15 Rθ
NO CA XV ACTIVITY TODAY

S