FEBRUARY 25, 2002 (P= -20.43, Bo = -7.15, Lo = 75.48)

KITT PEAK MAGNETOGRAM

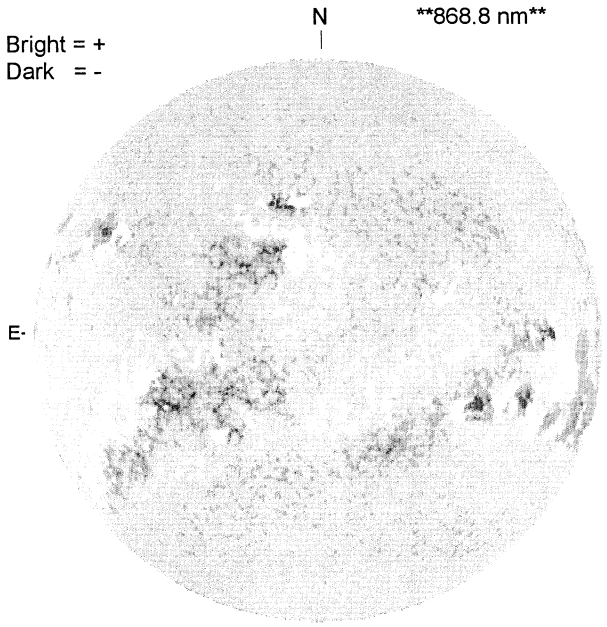

1950 UT

STANFORD MAGNETOGRAM

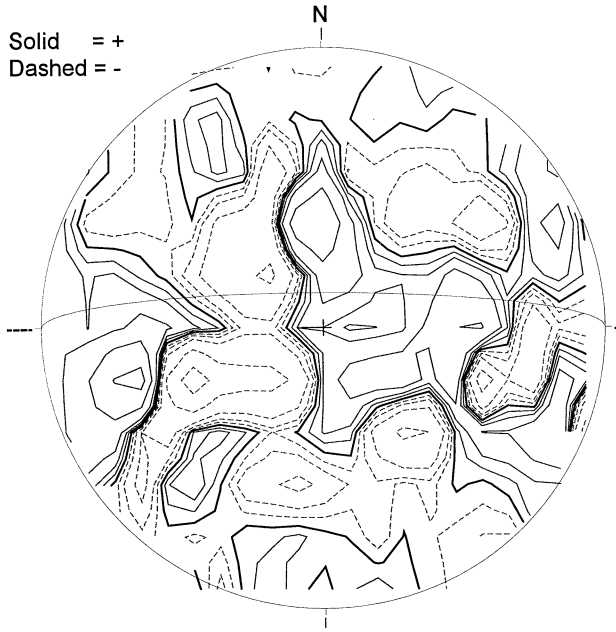

2244 UT

MT. WILSON MAGNETOGRAM

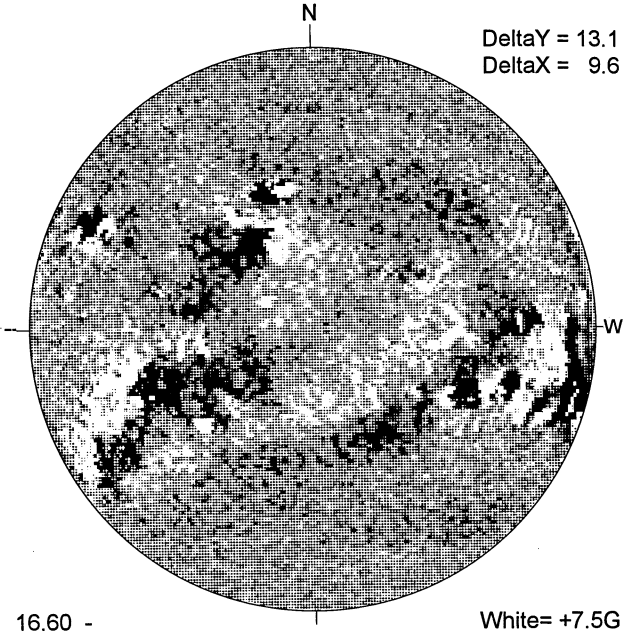

16.60 -
17.57 UT

White= +7.5G
Black = -7.5G

MEUDON H-ALPHA

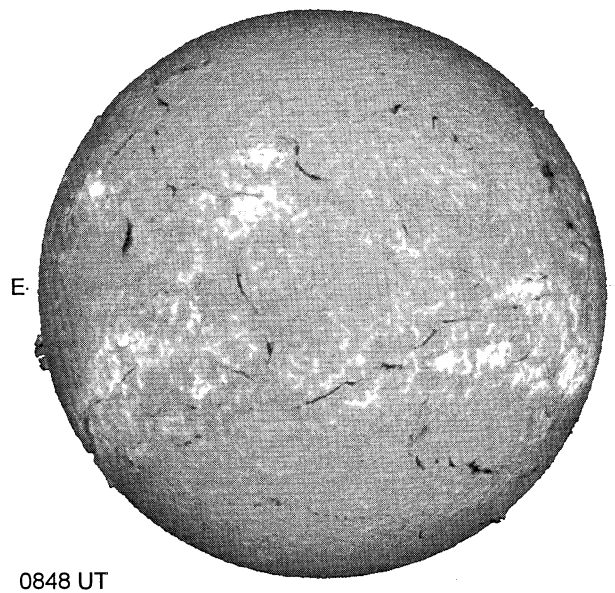

0848 UT

S

RAMEY SUNSPOT

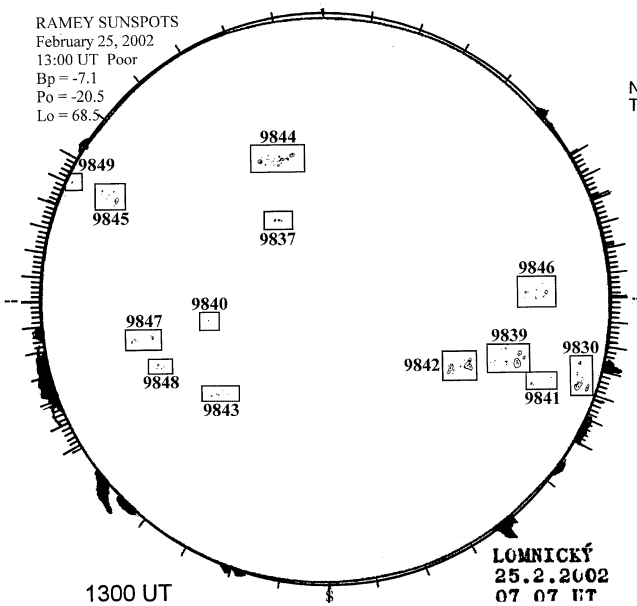

1300 UT
0707 UT LOMN Prom S

SACRAMENTO PEAK CORONA (1.15 Radii)----

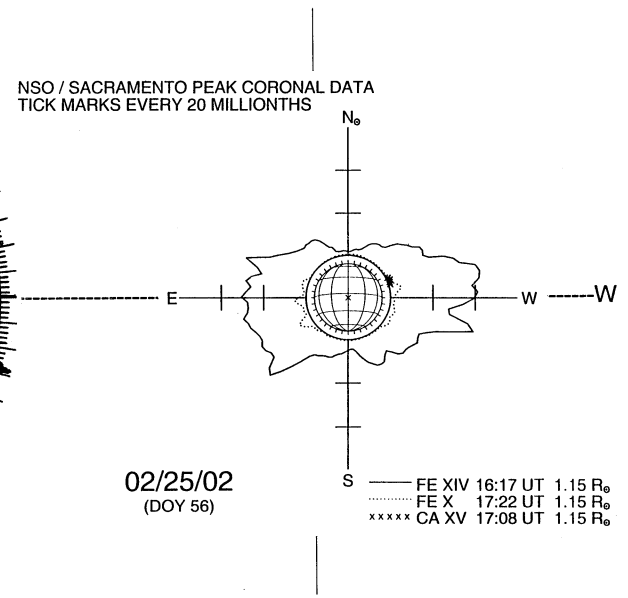

02/25/02
(DOY 56)

S