FEBRUARY 22, 2002 (P= -19.56, Bo = -7.08, Lo = 114.99)

KITT PEAK MAGNETOGRAM

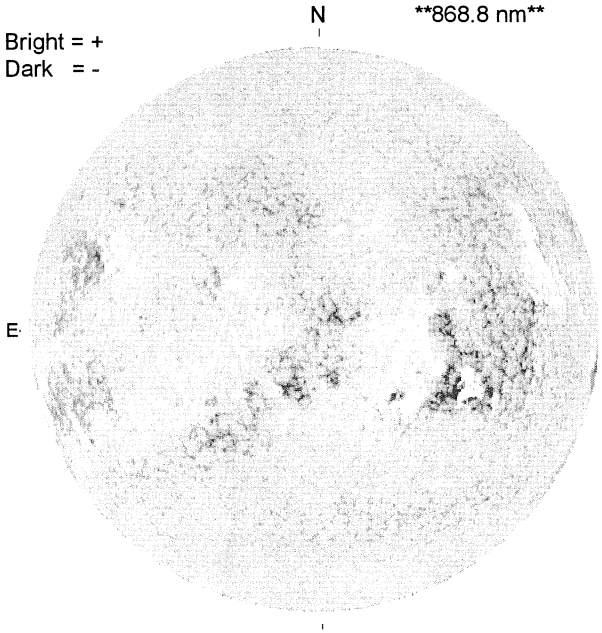

STANFORD MAGNETOGRAM

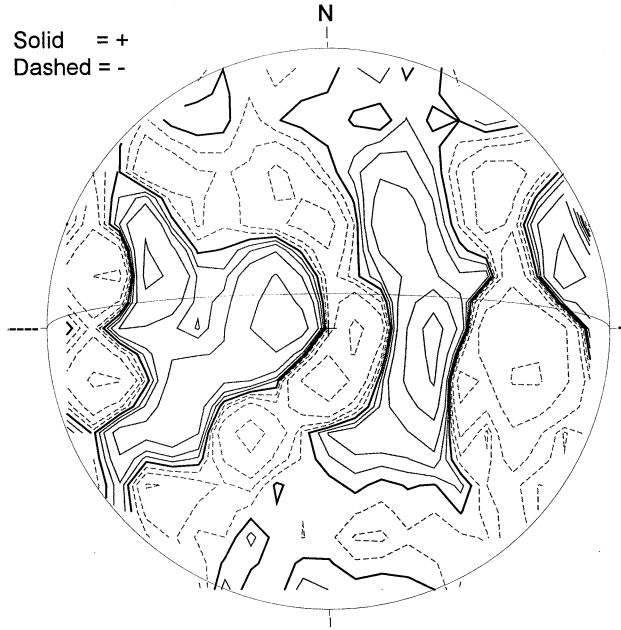

MT. WILSON MAGNETOGRAM

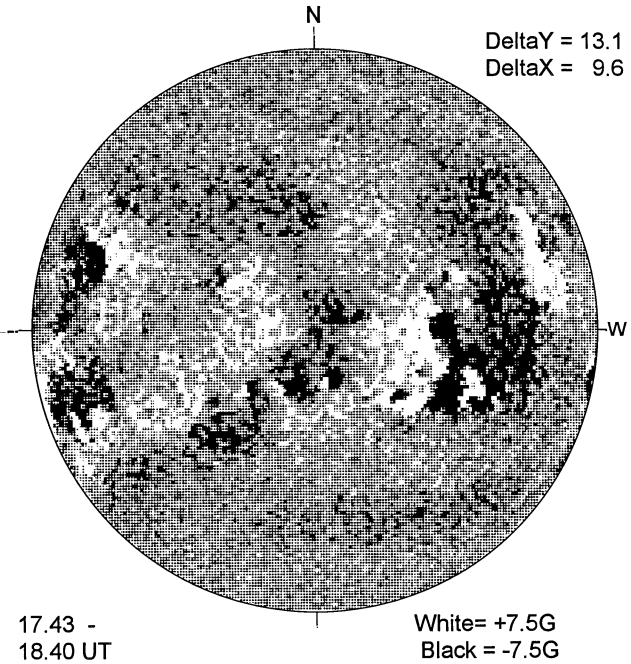

MEUDON H-ALPHA

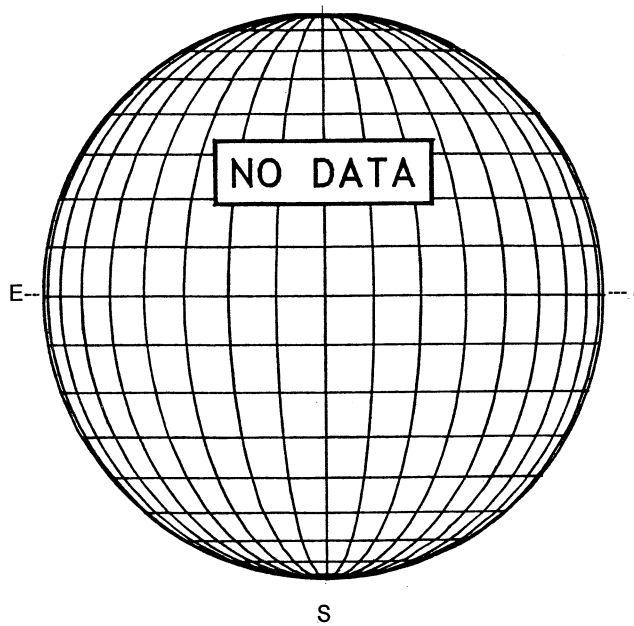

RAMEY SUNSPOT

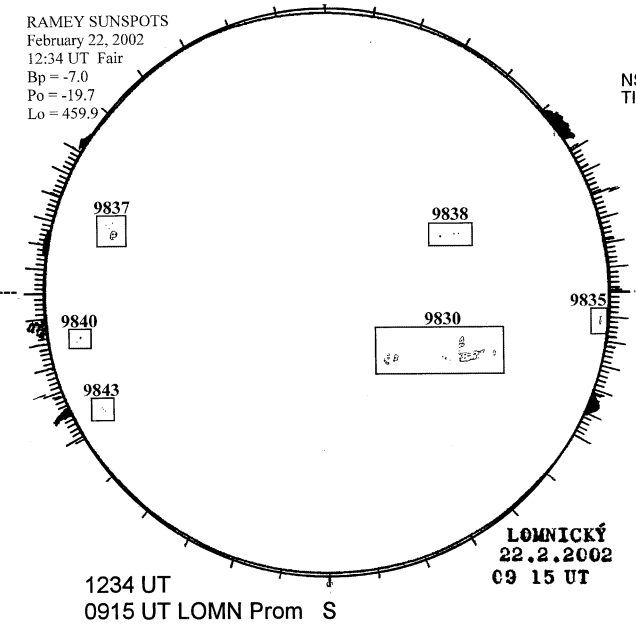
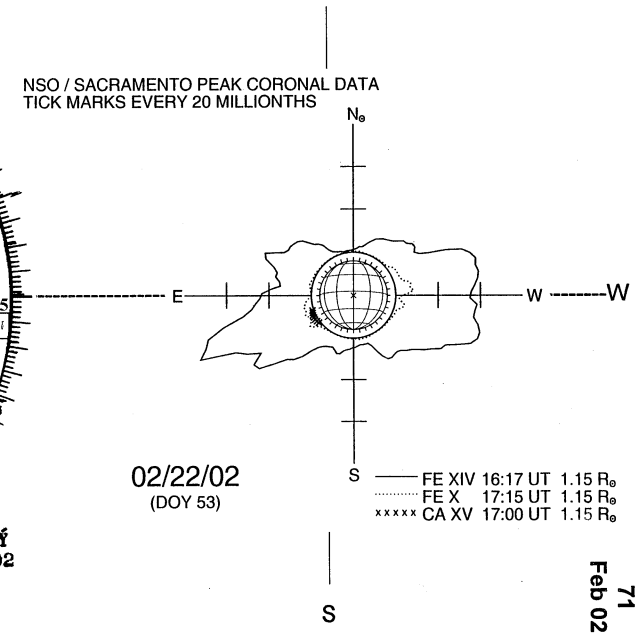
SACRAMENTO PEAK CORONA (1.15 Radii)----