FEBRUARY 12, 2002 (P= -16.31, Bo = -6.69 Lo = 246.68)

KITT PEAK MAGNETOGRAM

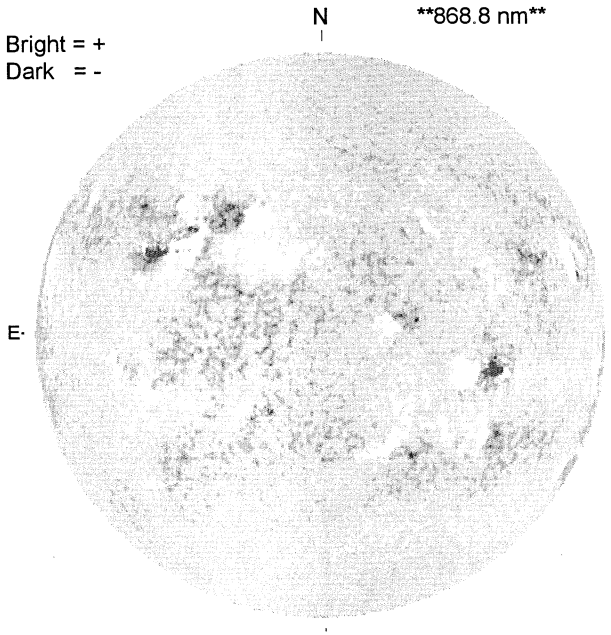

STANFORD MAGNETOGRAM

MT. WILSON MAGNETOGRAM

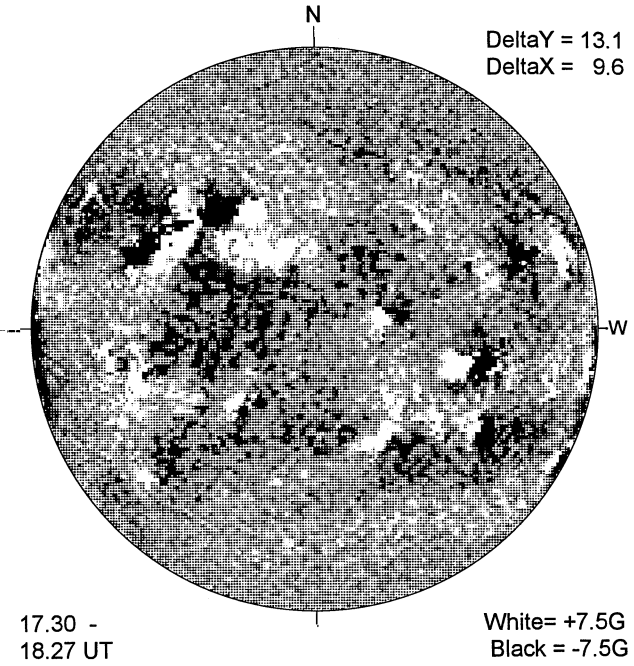

MEUDON H-ALPHA

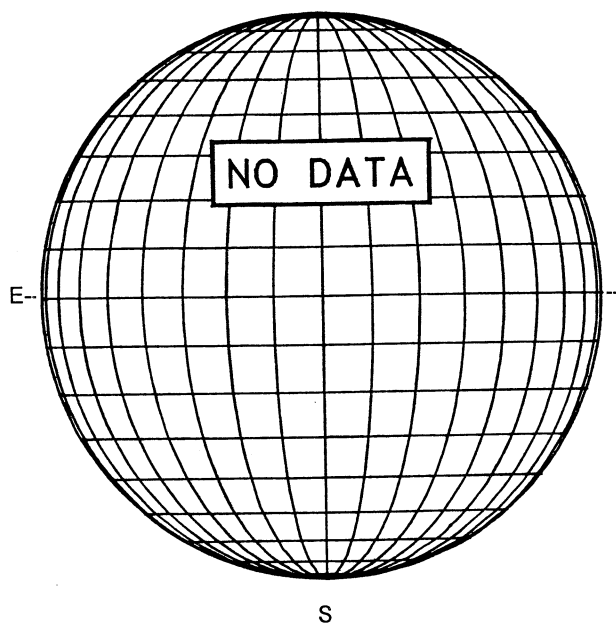

RAMEY SUNSPOTS

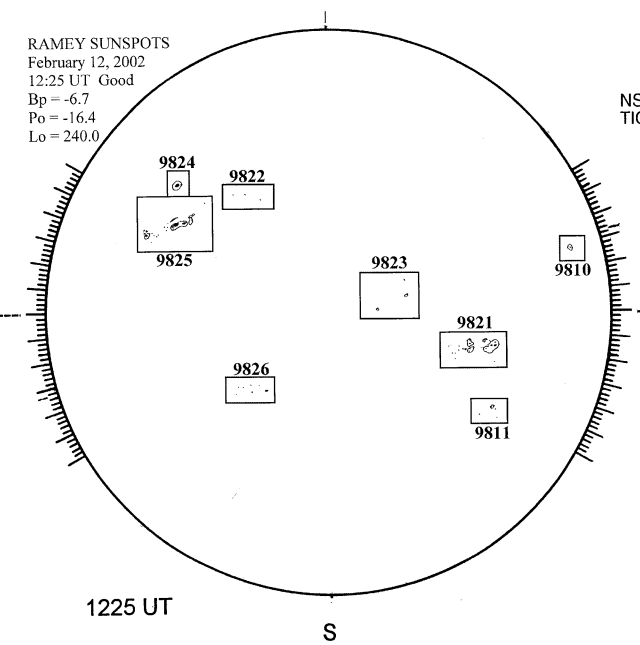
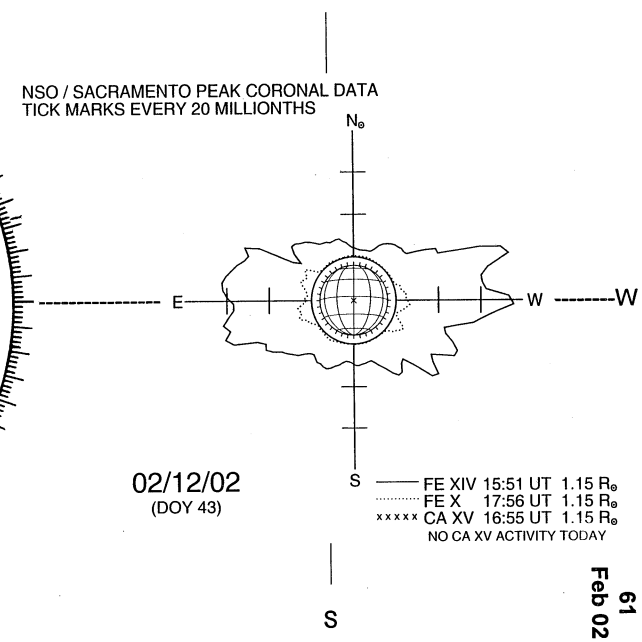
SACRAMENTO PEAK CORONA (1.15 Radii)----