FEBRUARY 11, 2002 (P= -15.95, Bo = -6.64, Lo = 259.85)

KITT PEAK MAGNETOGRAM

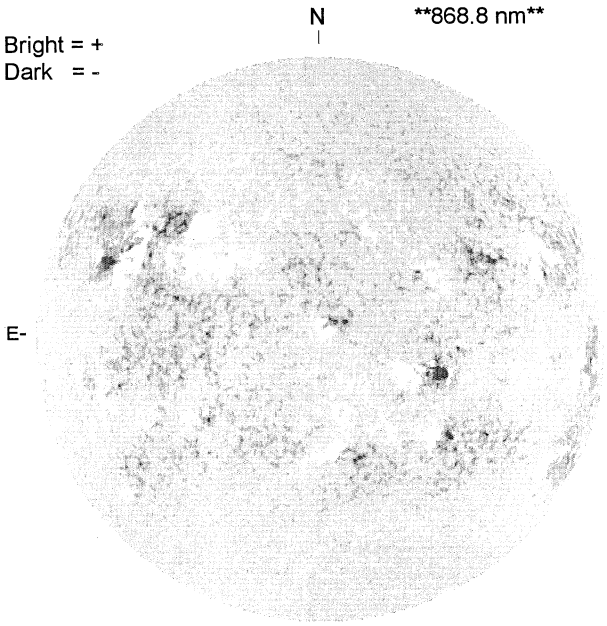

1728 UT

STANFORD MAGNETOGRAM

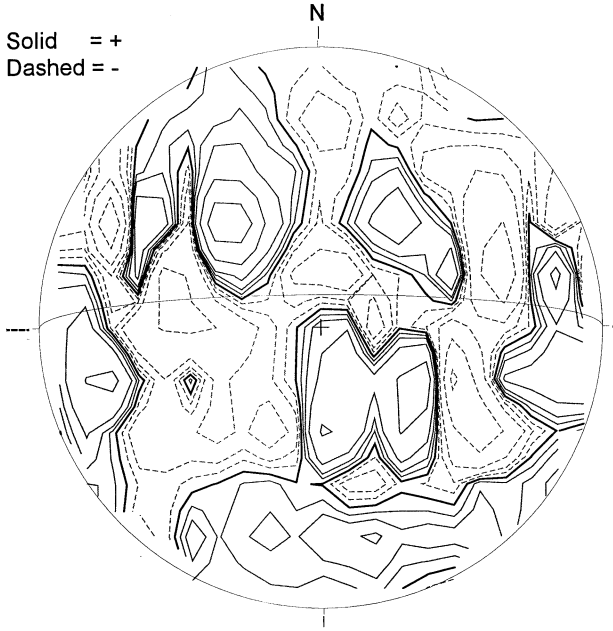

2143 UT

MT. WILSON MAGNETOGRAM

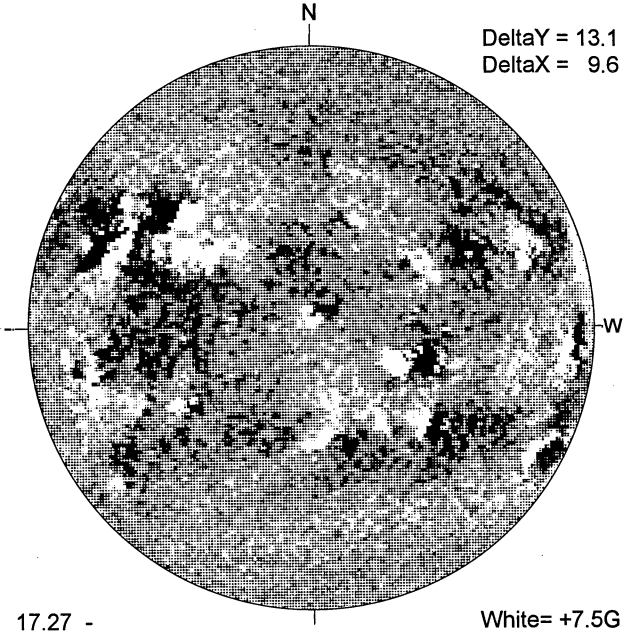

17.27 -
18.24 UT

MEUDON H-ALPHA

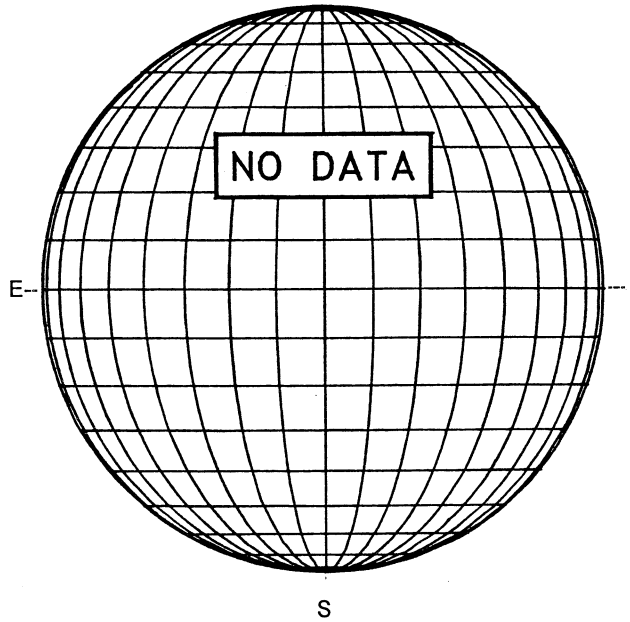

RAMEY SUNSPOTS

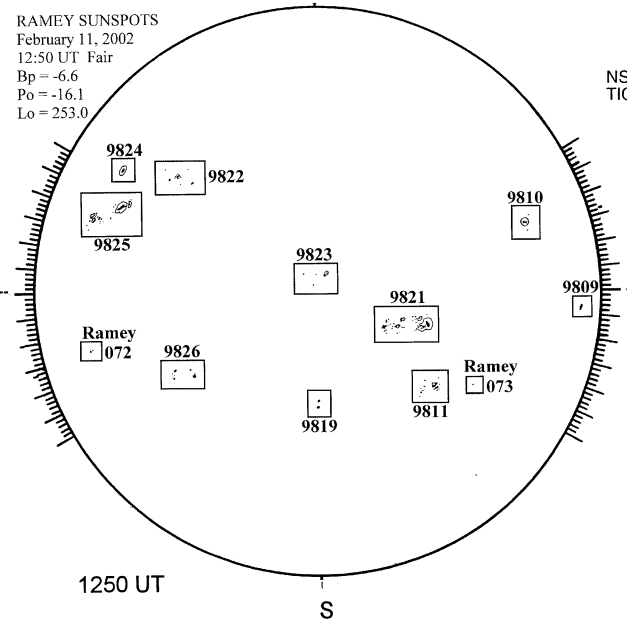

1250 UT

SACRAMENTO PEAK CORONA (1.15 Radii)----

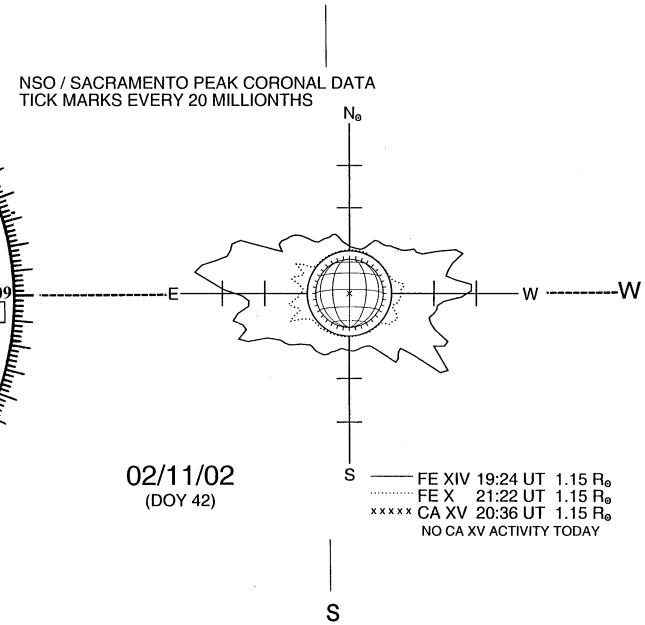

02/11/02
(DOY 42)